Gas Pressure Regulators & Filters

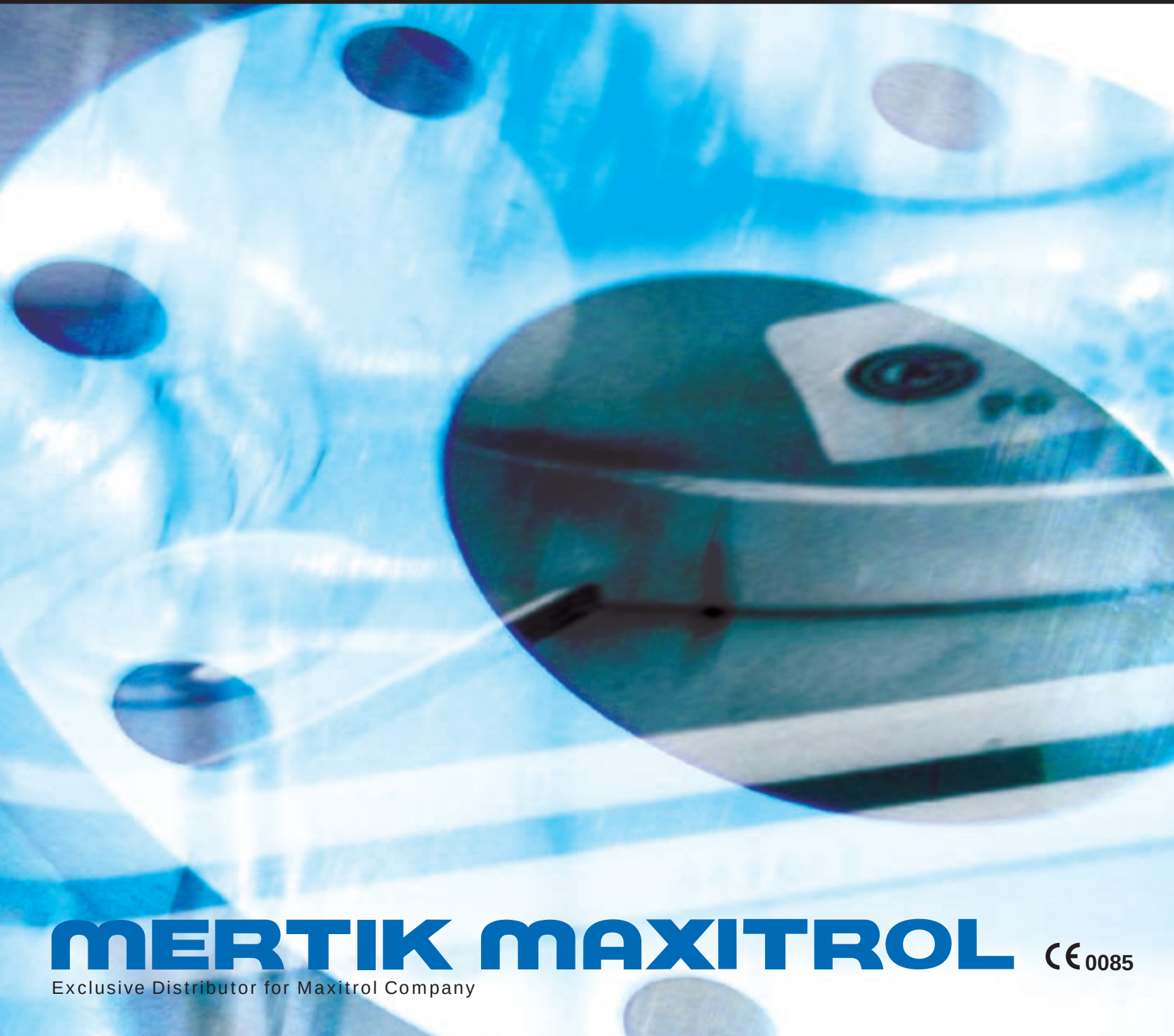

MERTIK MAXITROL

CE 0085

Exclusive Distributor for Maxitrol Company

Contents

Gas Appliance Regulators

RVLM Series - Rubber Seat Poppet Design 3
RV Series - Straight-Thru-Flow Design 5
R & RS Series - Balanced Valve Design 8
210 Series - Balanced Valve Design 10
325 Series - Lever Acting Design 12

Accessories

Vent Limiting Device 14
Pressure Tap Connector 14
Dust Cap 14
Tamper Proof Seals 15
Sizing a Regulator 15

HF 2000 Series Gas & Air Filters

..... 16

Pressure Drop Charts

RVLM Series 19
RV Series 20
R & RS Series 21
210 Series 22
325 Series 23
HF 2000 Series Gas & Air Filters 24

All regulators and filters should be installed and operated in accordance with Mertik Maxitrol's Safety Warning Bulletins. Mertik Maxitrol Company is NOT responsible for any errors or omissions in reliance by anyone of any information set forth in this handbook without additional reference to local requirements and applicable ordinances or codes.

Other worldwide approvals and certifications available upon inquiry.

RVLM Series - RUBBER SEAT POPPET DESIGN

DESCRIPTION

The compact RVLM Series poppet regulators are designed primarily for main burner and pilot load applications. Typical applications include residential and commercial cooking appliances, hearth products, pilot lines, and residential water heaters.

SPECIFICATIONS

Connections:.....Rp ⅛ thru Rp ¾
Housing Material: .....Aluminium
Internal Components: .....Steel, aluminum, elastomer
Mounting: .....Suitable for multi-positional mounting. Install with gas flowing as indicated by the arrow on bottom casting.
Construction and Design:.....According to EN 88 and Gas Appliances Directive 90/396/EEC
Classification: .....Regulator grade B, group 2 according to EN 88
Gas Type: .....Gas family 1, 2, and 3 according to EN 437
Inlet Pressure:.....10 kPa
Outlet Pressure:.....0,25 to 3 kPa
Ambient Temperature Range:..... -15°C to 80°C
Thread Connections:.....According to EN 10226-1 / ISO 7-1
Pressure Drop:.....Please refer to page 19.

RV12LM

Pipe Sizes: Rp ⅛
Capacity: 0,5 m³/h air @ 0,25 kPa pressure drop
Weight: 0,04 kg

Outer Dimensions	
A. 43 mm	B. 9 mm
C. 43 mm	D. 35 mm

RV20LM

Pipe Sizes: Rp ¼, ⅜
Capacity: 1,3 m³/h air @ 0,25 kPa pressure drop
Weight: 0,10 kg

Outer Dimensions	
A. 55 mm	B. 13 mm
C. 61 mm	D. 45 mm

NOTE: For dimensions of RV47LM and RV48LM see page 4.

RV12LM, RV20LM
RV47LM, RV48LM

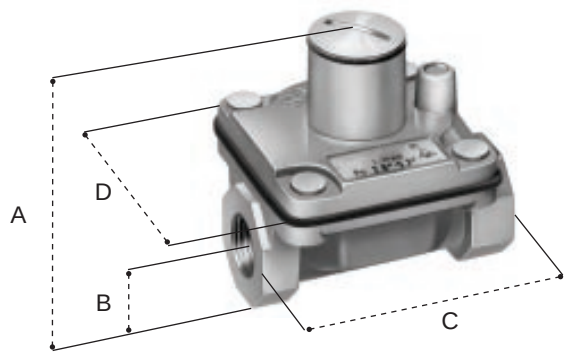

NOTE: Dimensions are to be used only as an aid in designing clearance for the valve. Actual production dimensions may vary somewhat from those shown.

© 2009 Mertik Maxitrol, All Rights Reserved.

RV47LM

Pipe Sizes: Rp ⅜, ½
Capacity: 2,2 m³/h air @ 0,25 kPa pressure drop
Weight: 0,17 kg

Outer Dimensions	
A. 66 mm	B. 16 mm
C. 75 mm	D. 57 mm

RV48LM

Pipe Sizes: Rp ½, ¾
Capacity: 4,8 m³/h air @ 0,25 kPa pressure drop
Weight: 0,26 kg

Outer Dimensions	
A. 72 mm	B. 19 mm
C. 86 mm	D. 75 mm

NOTE: Dimensions are to be used only as an aid in designing clearance for the valve. Actual production dimensions may vary somewhat from those shown.

Drawing of RV47LM and RV48LM see page 3.

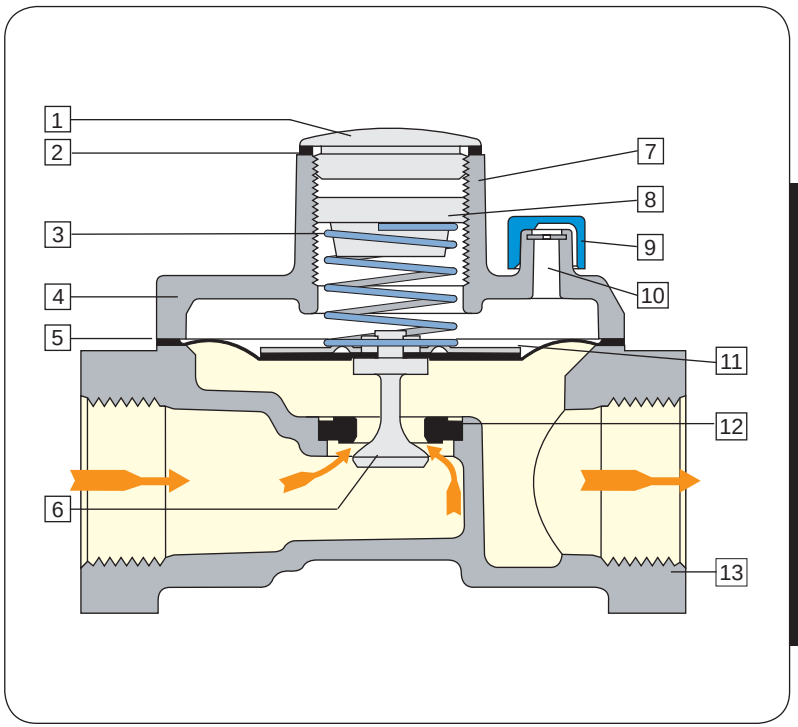

1	Seal Cap
2	Seal Cap Gasket
3	Spring
4	Top Housing
5	Diaphragm
6	Stem & Valve
7	Stack
8	Adjusting Screw
9	Dust Cap
10	Vent
11	Diaphragm Plate
12	Rubber Seat
13	Bottom Housing

CE 0085
© 2009 Mertik Maxitrol, All Rights Reserved.

RV Series - STRAIGHT-THRU-FLOW DESIGN

DESCRIPTION

Maxitrol's original straight-thru-flow design regulators are used on burner systems which require no lockup characteristic. Typical applications include residential, commercial, and industrial gas-fired appliances and equipment used on low/medium pressure gas supply.

SPECIFICATIONS

Connections: ..... Rp ½ thru Rp 3, DN100 (flanged) (RV131FM)
Housing Material: ..... Aluminum, cast iron (RV131FM)
Internal Components: ..... Steel, aluminum, elastomer
Mounting: ..... RV52, RV53, RV61 multi-positional mounting (if vent limiting device is installed, mount in an upright position only).
RV81, RV91, RV111, RV131 upright position only. Install with gas flowing as indicated by the arrow on bottom casting.
Construction and Design: ..... According to EN 88 and Gas Appliances Directive 90/396/EEC
Classification: ..... Regulator grade B, group 2 according to EN 88
Gas Type: ..... Gas family 1, 2, and 3 according to EN 437
Inlet Pressure:
RV52M: ..... 10 kPa
RV53M, RV61M, RV81M,RV91M, RV111M: ..... 20 kPa
RV131FM: ..... 35 kPa
Outlet Pressure:
RV52M: ..... 0,25 to 5,5 kPa
RV53M, RV61M: ..... 0,25 to 7,5 kPa
RV81M, RV91M, RV111M: ..... 0,25 to 10,5 kPa
RV131FM: ..... 0,5 to 10,5 kPa
Ambient Temperature Range: ..... -15°C to 80°C
Thread Connections: ..... According to EN 10226-1 / ISO 7-1
Flanged Connections: ..... According to ISO 7005-2 PN 16
Seven different body sizes
Pressure Drop: ..... Please refer to page 20.

© 2009 Mertik Maxitrol, All Rights Reserved.

RV52/53M

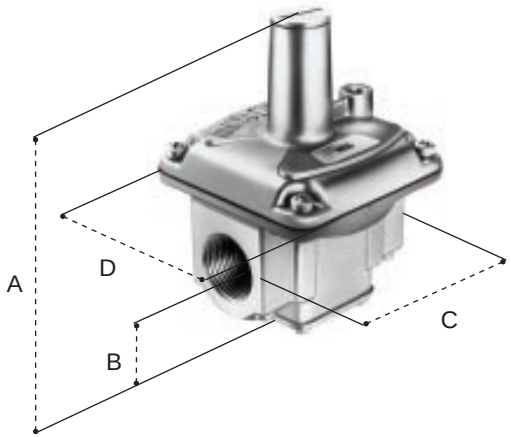

RV61M, RV81M, RV91M, RV111M

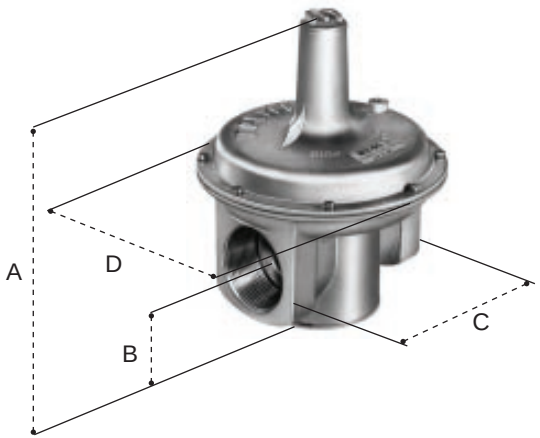

NOTE: Dimensions are to be used only as an aid in designing clearance for the valve. Actual production dimensions may vary somewhat from those shown.

RV52M

Pipe Sizes: Rp ½, ¾
Capacity: 8,0 m³/h air @ 0,25 kPa pressure drop
Weight: 0,45 kg

Outer Dimensions	
A. 120 mm	B. 33 mm
C. 81 mm	D. 83 mm

RV53M

Pipe Sizes: Rp ¾, 1
Capacity: 12,0 m³/h air @ 0,25 kPa pressure drop
Weight: 0,72 kg

Outer Dimensions	
A. 139 mm	B. 35 mm
C. 103 mm	D. 99 mm

RV61M

Pipe Sizes: Rp 1, 1¼
Capacity: 25,0 m³/h air @ 0,25 kPa pressure drop
Weight: 1,10 kg

Outer Dimensions	
A. 167 mm	B. 43 mm
C. 112 mm	D. 138 mm

RV81M

Pipe Sizes: Rp 1¼, 1½
Capacity: 40,0 m³/h air @ 0,25 kPa pressure drop
Weight: 2,20 kg

Outer Dimensions	
A. 216 mm	B. 53 mm
C. 146 mm	D. 178 mm

RV91M

Pipe Sizes: Rp 2, 2½
Capacity: 70,0 m³/h air @ 0,25 kPa pressure drop
Weight: 3,70 kg

Outer Dimensions	
A. 272 mm	B. 63 mm
C. 181 mm	D. 232 mm

RV111M

Pipe Sizes: Rp 2½, 3
Capacity: 150,0 m³/h air @ 0,25 kPa pressure drop
Weight: 7,0 kg

Outer Dimensions	
A. 382 mm	B. 87 mm
C. 229 mm	D. 342 mm

 CE 0085 © 2009 Mertik Maxitrol, All Rights Reserved.

RV131FM

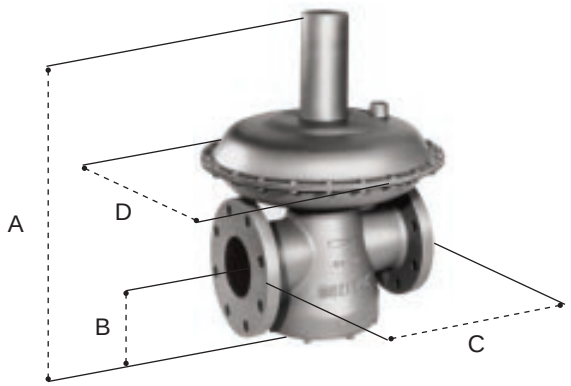

RV131FM
Pipe Sizes: DN 100
Capacity: 250,0 m³/h air @ 0,25 kPa pressure drop
Weight: 57,0 kg

Outer Dimensions	
A. 574 mm	B. 120 mm
C. 350 mm	D. 457 mm

NOTE: Dimensions are to be used only as an aid in designing clearance for the valve. Actual production dimensons may vary slightly from those shown.

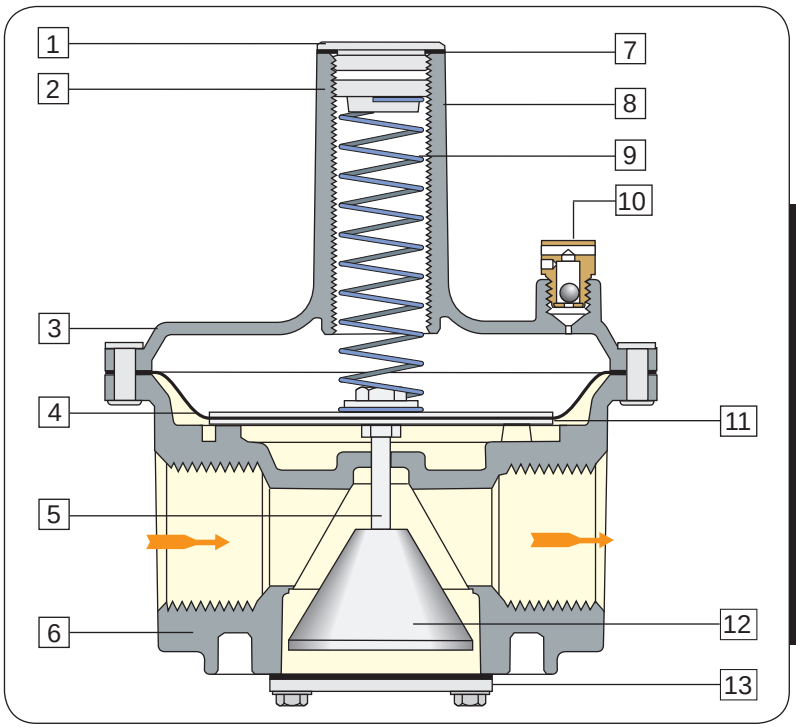

1	Seal Cap
2	Adjusting Screw
3	Top Housing
4	Diaphragm
5	Stem
6	Bottom Housing
7	Seal Cap Gasket
8	Stack
9	Spring
10	Vent Limiting Device
11	Diaphragm Plates
12	Valve
13	Bottom Plate

© 2009 Mertik Maxitrol, All Rights Reserved.

R & RS Series - BALANCED VALVE DESIGN

DESCRIPTION

The R & RS regulators are for main burner and pilot load applications. They are ideal for use in industrial applications such as infrared heaters and on pilot lines for large process heaters and bakers. They may also be used in residential applications as appliance regulators, “Z” models for air/gas ratio control, or as zero pressure regulators.

SPECIFICATIONS

Connections: .....Rp ⅜ thru Rp 1
Housing Material: .....Aluminium
Internal Components: .....Steel, aluminum, brass, elastomer
Mounting: .....Suitable for multi-positional mounting. If vent limiting device is installed, mount in an upright position only. Install with gas flowing as indicated by the arrow on bottom casting.
Construction and Design: .....According to EN 88 and Gas Appliances Directive 90/396/EEC
Classification:.....Regulator grade A, group 2 according to EN 88
Gas Type: .....Gas family 1, 2, and 3 according to EN 437
Inlet Pressure:
R400SM, R500SM, R600SM: .....36 kPa
R400ZM, R500ZM, R600ZM: .....10 kPa
Outlet Pressure:
R400SM, R500SM: .....0,25 to 5,5 kPa
R600SM: .....0,25 to 7,5 kPa
R400ZM, R500ZM, R600ZM: .....-0,25 to +0,35 kPa
Ambient Temperature Range: .....-15°C to 80°C
Thread Connections: .....According to EN 10226-1 / ISO 7-1
Three different body sizes
Pressure Drop:.....Please refer to page 21.

R400S(Z)M

Pipe Sizes: Rp ⅜, ½
Capacity: 5,0 m³/h air @ 0,25 kPa pressure drop
Weight: 0,2 kg

Outer Dimensions			
A.	86 mm	B.	24 mm
C.	56 mm	D.	51 mm

R400SM, R500SM, R600SM

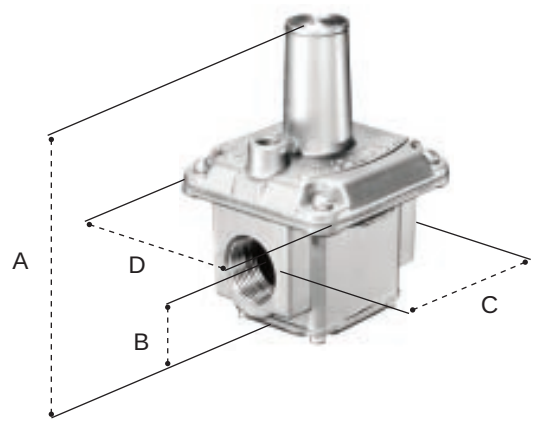

NOTE: Dimensions are to be used only as an aid in designing clearance for the valve. Actual production dimensions may vary slightly from those shown.

CE 0085 © 2009 Mertik Maxitrol, All Rights Reserved.

R500S(Z)M

Pipe Sizes: Rp ½, ¾
Capacity: 10,0 m³/h air @ 0,25 kPa pressure drop
Weight: 0,43 kg

Outer Dimensions	
A. 118 mm	B. 36 mm
C. 86 mm	D. 83 mm

R600S(Z)M

Pipe Sizes: Rp ¾, 1
Capacity: 18,0 m³/h air @ 0,25 kPa pressure drop
Weight: 0,7 kg

Outer Dimensions	
A. 146 mm	B. 37 mm
C. 103 mm	D. 99 mm

NOTE: Dimensions are to be used only as an aid in designing clearance for the valve. Actual production dimensions may vary slightly from those shown.

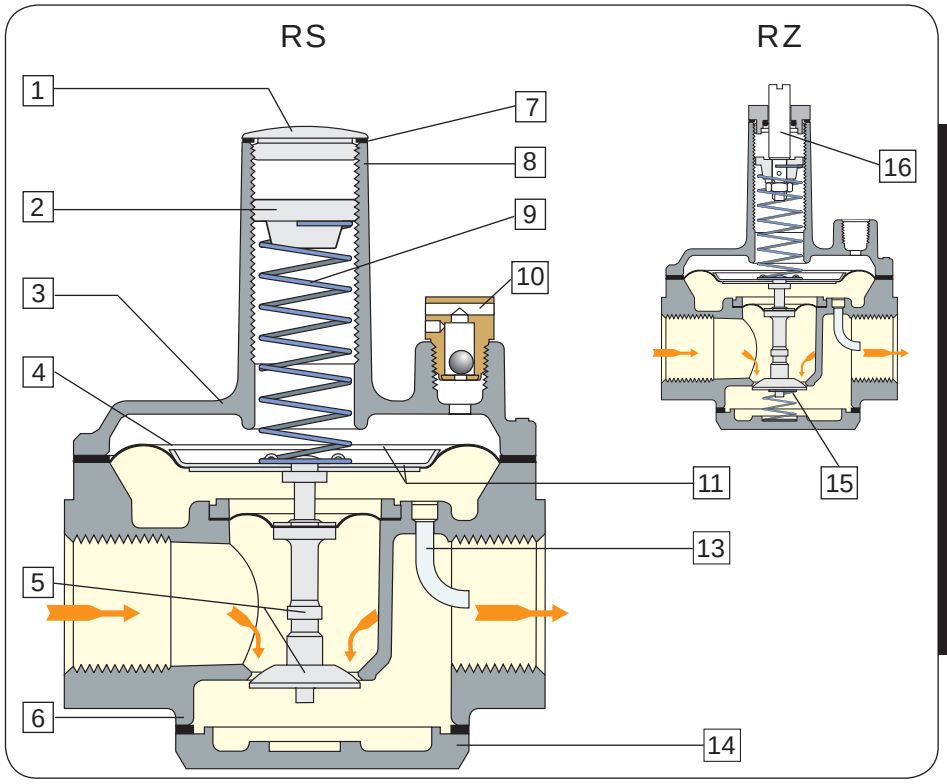

1	Seal Cap
2	Adjusting Screw
3	Top Housing
4	Regulating Diaphragm
5	Stem & Valve
6	Bottom Housing
7	Seal Cap Gasket
8	Stack
9	Spring
10	Vent Connection
11	Diaphragm Plates
12	Balancing Diaphragm
13	Sensing Tube
14	Bottom Plate
15	Counterspring
16	External Adjustment (optional)

© 2009 Mertik Maxitrol, All Rights Reserved.
CE 0085

210 Series - BALANCED VALVE DESIGN

DESCRIPTION

The 210 Series balanced valve design is a lock-up type regulator. Its intended applications include gas-fired boilers, steam generators, industrial furnaces, and ovens.

SPECIFICATIONS

Connections: .....Rp 1 thru Rp 3, DN 100 (flanged 210JM)
Housing Material: .....Aluminum, cast iron (210J(Z)M)
Internal Components: .....Steel, aluminum, brass, elastomer
Mounting: .....Suitable for multi-positional mounting. If vent limiting device is installed, mount in an upright position only. Install with gas flowing as indicated by the arrow on bottom casting.
Construction and Design: .....According to EN 88 and Gas Appliance Directive 90/396/EEC
Classification: .....Regulator grade A, group 2 according to EN 88
Gas Type: .....Gas family 1, 2, and 3 according to EN 437
Inlet Pressure:
210DM, 210EM,210GM, 210JM: .....85 kPa
210DZM, 210EZM, 210GZM, 210JZM: .....36 kPa
Outlet Pressure:
210DM, 210EM, 210GM: .....0,25 to 10,5 kPa
210JM: .....0,5 to 10,5 kPa
210DZM, 210EZM, 210GZM, 210JZM: .....-0,25 to +0,35 kPa
Ambient Temperature Range: .....-15°C to 80°C
Thread Connections: .....According to EN 10226-1 / ISO 7-1
Flanged Connections: .....According to ISO 7005-2 PN 16
Four different body sizes
Pressure Drop: .....Please refer to page 22.

210D(Z)M

Pipe Sizes: Rp 1, 1¼, 1½
Capacity: 30,0 m³/h air @ 0,25 kPa pressure drop
Weight: 2,7 kg

Outer Dimensions	
A. 231 mm	B. 65 mm
C. 141 mm	D. 178 mm

210E(Z)M

Pipe Sizes Rp 1½, 2
Capacity: 45,0 m³/h air @ 0,25 kPa pressure drop
Weight: 5,7 kg

Outer Dimensions	
A. 286 mm	B. 81 mm
C. 193 mm	D. 232 mm

210D(Z)M, 210E(Z)M, 210G(Z)M

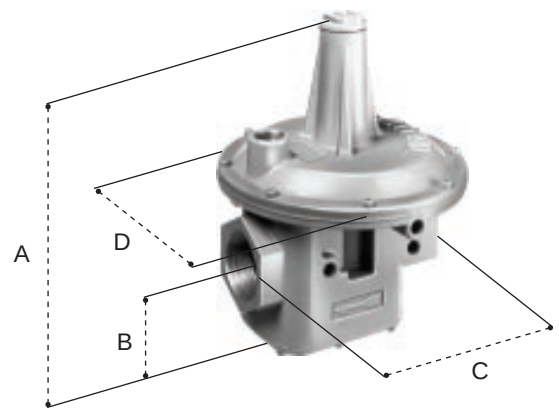

NOTE: Dimensions are to be used only as an aid in designing clearance for the valve. Actual production dimensions may vary slightly from those shown.

 CE 0085 © 2009 Mertik Maxitrol, All Rights Reserved.

210G(Z)M

Pipe Sizes: Rp 2½, 3
Capacity: 100,0 m³/h air @ 0,25 kPa pressure drop
Weight: 15,0 kg

Outer Dimensions	
A. 410 mm	B. 108 mm
C. 342 mm	D. 264 mm

210J(Z)M

Pipe Sizes: DN 100 (flanged)
Capacity: 200,0 m³/h air @ 0,25 kPa pressure drop
Weight: 57,8 kg

Outer Dimensions	
A. 588 mm	B. 139 mm
C. 350 mm	D. 457 mm

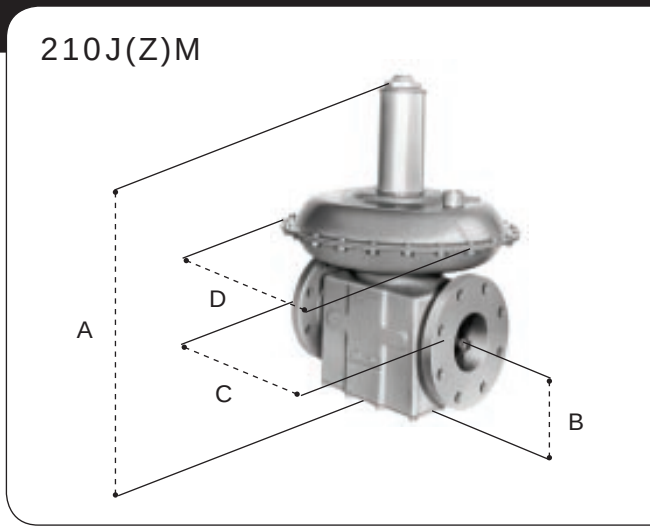

NOTE: Dimensions are to be used only as an aid in designing clearance for the valve. Actual production dimensions may vary somewhat from those shown.

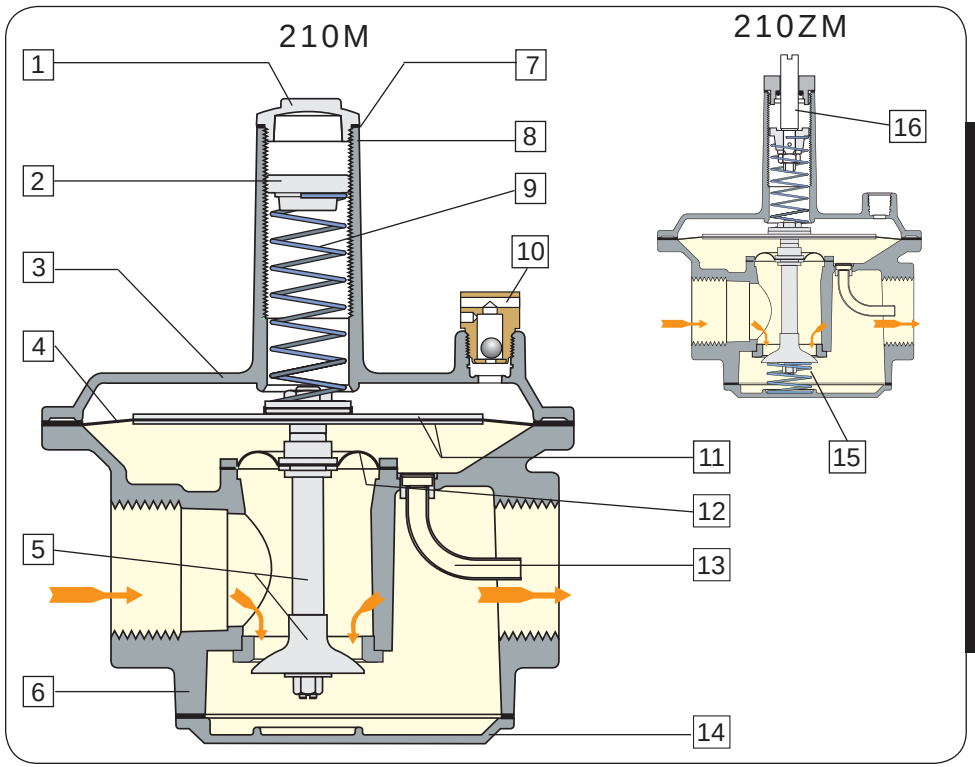

1	Seal Cap	9	Spring
2	Adjusting Screw	10	Vent Connection
3	Top Housing	11	Diaphragm Plates
4	Regulating Diaphragm	12	Balancing Diaphragm
5	Stem & Valve	13	Sensing Tube
6	Bottom Housing	14	Bottom Plate
7	Seal Cap Gasket	15	Counterspring
8	Stack	16	External Adjustment (optional)

© 2009 Mertik Maxitrol, All Rights Reserved.

325 Series - LEVER ACTING DESIGN

DESCRIPTION

Maxitrol's 325 Series lever acting regulator with lock-up characteristic is designed for main burner and pilot applications.

SPECIFICATIONS

Connections: ..... Rp ⅜ thru Rp 1½
Housing Material: ..... Aluminium
Internal Components: ..... Steel, aluminium, elastomer, plastic
Mounting: ..... Suitable for multi-positional mounting. If vent limiting device is installed, mount in an upright position only. Install with gas flowing as indicated by the arrow on bottom casting.
Construction and Design: ..... According to EN 88 and Gas Appliance Directive 90/396/EEC
Classification: ..... Regulator grade A, group 2 according to EN 88
Gas Type: ..... Gas family 1, 2, and 3 according to EN 437
Inlet Pressure:
325-3M, 325-5AM, 325-7M: ..... 100 kPa
Outlet Pressure:
325-3M, 325-5AM: ..... 0,5 to 14 kPa
325-7M: ..... 0,5 to 10,5 kPa
Ambient Temperature Range: ..... -15°C to 80°C
Thead Connections: ..... According to EN 10226-1 / ISO 7-1
Three different body sizes
Pressure Drop: ..... Please refer to page 23.

NOTE: Dimensions are to be used only as an aid in designing clearance for the valve. Actual production dimensions may vary slightly from those shown.

325-3M

Pipe Sizes: Rp ⅜, ½
Capacity: 1,1 m³/h air @ 0,25 kPa pressure drop
Weight: 0,4 kg

Outer Dimensions	
A. 91 mm	B. 17 mm
C. 110 mm	D. 95 mm

325-5AM

Pipe Sizes: Rp ½, ¾, 1
Capacity: 2,5 m³/h air @ 0,25 kPa pressure drop
Weight: 0,82 kg

Outer Dimensions	
A. 139 mm	B. 23 mm
C. 155 mm	D. 139 mm

325-3M, 325-5AM

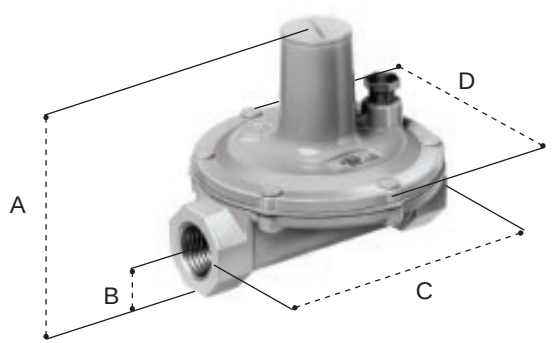

 CE 0085 © 2009 Mertik Maxitrol, All Rights Reserved.

325-7M

Pipe Sizes: Rp 1¼, 1½
Capacity: 6m³/h air @ 0,25 kPa pressure drop
Weight: 0,8 kg

Outer Dimensions	
A. 181 mm	B. 31 mm
C. 203 mm	D. 178 mm

325-7M

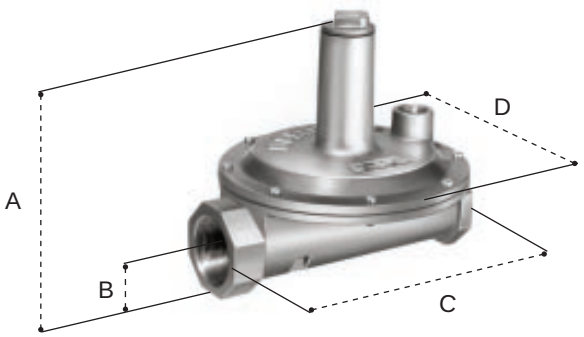

NOTE: Dimensions are to be used only as an aid in designing clearance for the valve. Actual production dimensions may vary slightly from those shown.

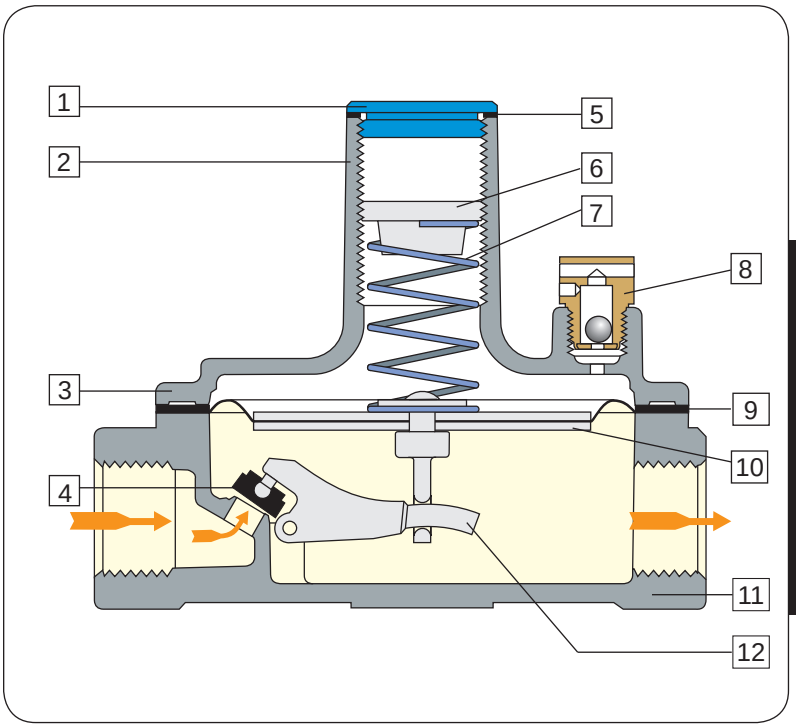

1	Seal Cap	7	Spring
2	Stack	8	Vent Connection
3	Top Housing	9	Diaphragm
4	Rubber Valve	10	Diaphragm Plates
5	Seal Cap Gasket	11	Bottom Housing
6	Adjusting Screw	12	Lever

© 2009 Mertik Maxitrol, All Rights Reserved.

Vent Limiting Device

The Maxitrol vent limiting device permits the release of air into the environment during normal operation. In the event of a diaphragm rupture, gas escapement is limited to within the EN 88 / EN 13611 standard requirements. This Vent Limiting Device is part of the regulator and can only be used with Maxitrol regulators.

Pressure Tap Connector (optional)

No. PF10: Maxitrol's pressure tap connector installed as part of the control. It is a hose fitting incorporating a captured sealing means for reading outlet pressure.

CHOOSING A VENT ACCESSORY

NOTE: If Maxitrol's Vent Limiting Device is not used, regulator must be vent piped in accordance with government and local codes and regulations.

RV52M, RV53M, RV61M: .....Rp ⅛ ------- Vent tap. Optional 12A04 Maxitrol Vent Limiting Device.

RV81M: .....Rp ⅜
RV91M-1616: .....Rp ½
RV91M-2020: .....Rp ¼
RV111M: .....Rp ¾ ------- Vent tap. Optional 12A39 Maxitrol Vent Limiting Device.

210D(Z)M: .....Rp ⅜
210E(Z)M: .....Rp ½
210G(Z)M: .....Rp ¾
325-3M: .....Rp ⅛ ------- Vent tap. Optional 12A09 Maxitrol Vent Limiting Device.

325-5AM: .....Rp ⅜
325-7M: .....Rp ½ ------- Vent tap. Optional 12A39 Maxitrol Vent Limiting Device.

R400SM/ZM, R500SM/ZM, R600SM/ZM: ..Rp ⅛ ------- Vent tap. Optional 12A04 Maxitrol Vent Limiting Device.

Dust Cap

- Use on vent opening to prevent blockage of breather hole from dust or other foreign particles.
- **No. 13A09:** for Rp ⅛ NPT vent. Press-in dust cap.

VENT LIMITING DEVICES



12A04/12A09



12A39

PRESSURE TAP



PF10

DUST CAP



13A09

CE 0085 © 2009 Mertik Maxitrol, All Rights Reserved.

Tamper Proof Seals (TPS) (optional)

Permanent sealing of the seal cap screw. Tampering and unauthorized changing of outlet pressure can be easily detected. Available in two sizes.

- **No. 101310:**
  for RV12LM, RV20LM, RV47LM, RV48LM, RV52M, RV53M, RV61M, R400SM/ZM, R500SM/ZM, R600SM/ZM, 325-3M, 325-5AM
- **No. 101311:**
  for RV81M, RV91M, RV111M, RV131FM, 210D(Z)M, 210E(Z)M, 210G(Z)M, 210J(Z)M, 325-7M

TAMPER PROOF SEALS

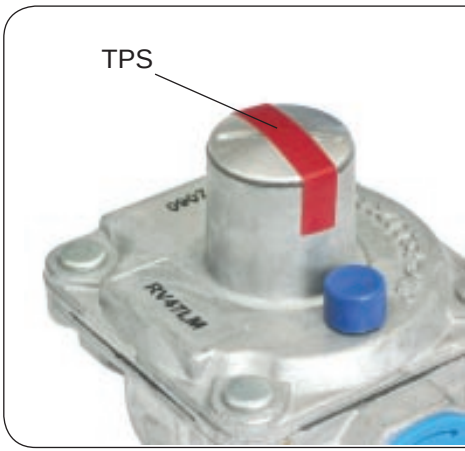

Sizing a Regulator

When sizing a regulator the following must be known:

- Available inlet pressure
- Desired outlet pressure
- Required maximum flow rate in m^3/h or kW
- Pipe size
- Will the regulator be used for main burner and pilot application OR main burner only?
- Is positive dead-end lock-up required?
- Is it a zero pressure regulator application?

NOTE: **Please contact Mertik Maxitrol directly for more information on sizing a regulator.**

The capacity of any regulator (see diagrams pages 19-24) is not an absolute value but will vary with the application depending on the prevailing differential.

© 2009 Mertik Maxitrol, All Rights Reserved.

HF 2000 Series Gas & Air Filters

DESCRIPTION

Mertik Maxitrol's gas and air filters protect downstream controls (regulators, automatic shut-off valves) from particulate contamination.

SPECIFICATIONS

Connections: ..... Rp ½ thru Rp 2, DN 25 thru DN 150 (flanged)
Housing Material: ..... Aluminium
Internal Components: ..... Aluminium, elastomer, polyproylene fleece, galvanized wire mesh
Mounting: ..... Suitable for multi-positional mounting, preferably with lid facing down or to the side to facilitate removal of debris during maintenance. Install with gas flowing as indicated by the arrow on the casting.
Construction and Design: ..... According to DIN 3386, Gas Appliances 90/396/EEC and Pressure Equipment Directive 97/23/EEC
Gas Type: ..... Gas family 1, 2, and 3 according to EN 437
Pressure Tap Connector: ..... Optional: pressure tap (PF10) connection inlet and/or outlet side
Ambient Temperature Range: ..... -20°C to 80°C
Storage and Transport Temperature: ..... -50°C to 80°C
Thread Connections: ..... According to EN 10226-1 / ISO 7-1, Rp ½ thru Rp 2
Flanged Connections: ..... According to ISO 7005-2, PN 16; DN 25 thru DN 150
Eight different body sizes
Pressure drop: ..... Please refer to page 24.
Service: ..... It is recommended to replace the filter insert every year or if the pressure drop Δp > 1 kPa.

THREAD CONNECTION

GF40M-44
Pressure: 100 kPa, 400 kPa
Pipe Sizes: Rp ½
Weight: 0,2 kg

Outer Dimensions			
H2.	31 mm	D1.	58x58 mm
H1.	22 mm	L.	68 mm
a (Space for filter replacement) 60 mm			

GF60M-66
Pressure: 100 kPa, 400 kPa
Pipe Sizes: Rp ¾
Weight: 0,7 kg

Outer Dimensions			
H2.	53 mm	D1.	94x94 mm
H1.	41 mm	L.	110 mm
a (Space for filter replacement) 100 mm			

THREADED

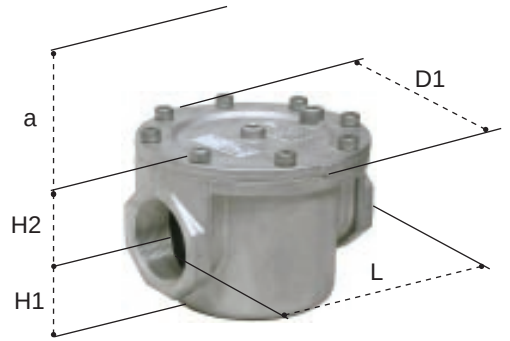

NOTE: Dimensions are to be used only as an aid in designing clearance for the valve. Actual production dimensions may vary slightly from those shown.

CE 0085
© 2009 Mertik Maxitrol, All Rights Reserved.

FLANGED

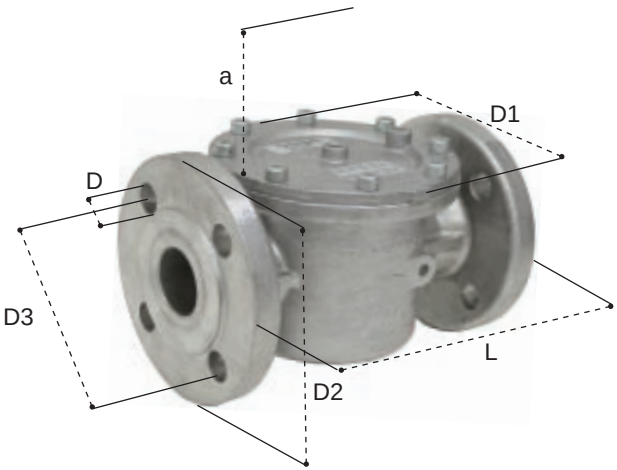

NOTE: Dimensions are to be used only as an aid in designing clearance for the valve. Actual production dimensions may vary slightly from those shown.

n = number of the flange holes

GF60M-88
Pressure: 100 kPa, 400 kPa
Pipe Sizes: Rp 1
Weight: 0,7 kg

Outer Dimensions			
H2.	53 mm	D1.	94x94 mm
H1.	41 mm	L.	110 mm
a (Space for filter replacement) 100 mm			

GF80M-1010
Pressure: 100 kPa, 400 kPa
Pipe Sizes: Rp 1¼
Weight: 1,7 kg

Outer Dimensions			
H2.	69 mm	D1.	154 mm
H1.	57 mm	L.	157 mm
a (Space for filter replacement) 150 mm			

GF80M-1212
Pressure: 100 kPa, 400 kPa
Pipe Sizes: Rp 1½
Weight: 1,7 kg

Outer Dimensions			
H2.	69 mm	D1.	154 mm
H1.	57 mm	L.	157 mm
a (Space for filter replacement) 150 mm			

GF80M-1616
Pressure: 100 kPa, 400 kPa
Pipe Sizes: Rp 2
Weight: 1,7 kg

Outer Dimensions			
H2.	69 mm	D1.	155 mm
H1.	57 mm	L.	157 mm
a (Space for filter replacement) 150 mm			

FLANGE CONNECTION

GF25MF-88
Pressure: 100 kPa, 400 kPa, 600 kPa
Pipe Sizes: DN 25
Weight: 1,4 kg

Outer Dimensions					
L.	165 mm	D2.	115 mm	nxD.	4x14 mm
D1.	94x94 mm	D3.	85 mm		
a (Space for filter replacement) 100 mm					

GF40MF-1212
Pressure: 100 kPa, 400 kPa, 600 kPa
Pipe Sizes: DN 40
Weight: 3,2 kg

Outer Dimensions					
L.	223 mm	D2.	150 mm	nxD.	4x18 mm
D1.	155 mm	D3.	110 mm		
a (Space for filter replacement) 130 mm					

GF50MF-1616
Pressure: 100 kPa, 400 kPa, 600 kPa
Pipe Sizes: DN 50
Weight: 3,2 kg

Outer Dimensions					
L.	210 mm	D2.	165 mm	nxD.	4x18 mm
D1.	155 mm	D3.	125 mm		
a (Space for filter replacement) 130 mm					

GF65MF-2020
Pressure: 100 kPa, 400 kPa, 600 kPa
Pipe Sizes: DN 65
Weight: 4,6 kg

Outer Dimensions					
L.	245 mm	D2.	185 mm	nxD.	4x18 mm
D1.	190 mm	D3.	145 mm		
a (Space for filter replacement) 190 mm					

© 2009 Mertik Maxitrol, All Rights Reserved.

GF80MF-2424
Pressure: 100 kPa, 400 kPa, 600 kPa
Pipe Sizes: DN 80
Weight: 5,8 kg

Outer Dimensions		
L. 285 mm	D2. 200 mm	nxD. 8x18 mm
D1. 208 mm	D3. 160 mm	
a (Space for filter replacement) 200 mm		

GF100MF-3232
Pressure: 100 kPa, 400 kPa, 600 kPa
Pipe Sizes: DN 100
Weight: 8,5 kg

Outer Dimensions		
L. 340 mm	D2. 220 mm	nxD. 8x18 mm
D1. 263 mm	D3. 180 mm	
a (Space for filter replacement) 220 mm		

GF125MF-4040
Pressure: 100 kPa, 400 kPa, 600 kPa
Pipe Sizes: DN 125
Weight: 14,1 kg

Outer Dimensions		
L. 400 mm	D2. 250 mm	nxD. 8x18 mm
D1. 315 mm	D3. 210 mm	
a (Space for filter replacement) 270 mm		

GF150MF-4848
Pressure: 100 kPa, 400 kPa, 600 kPa
Pipe Sizes: DN 150
Weight: 19,8 kg

Outer Dimensions		
L. 450 mm	D2. 285 mm	nxD. 8x22 mm
D1. 356 mm	D3. 240 mm	
a (Space for filter replacement) 310 mm		

NOTE: Dimensions are to be used only as an aid in designing clearance for the valve. Actual production dimensions may vary slightly from those shown.

n = number of the flange holes

FILTER INSERTS

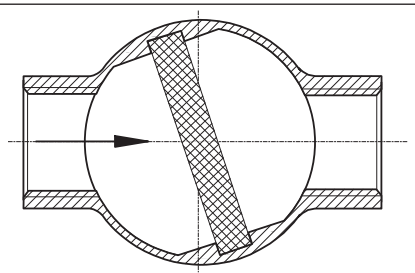

Filter Insert for:
Rp ½, ¾, 1 & DN 25

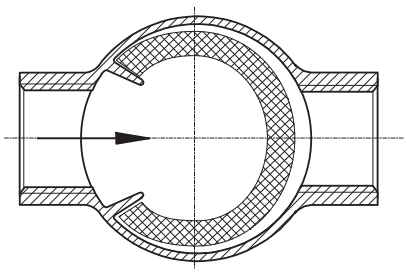

Filter Insert for:
Rp 1¼, 1½, 2 &
DN 40 thru DN 150

GAS FILTER SERVICE KIT
(Insert, Gasket, and Screws)

	Type	Units per Package
Rp ½	Kit-GF40M	10
Rp ¾	Kit-GF60M	
Rp 1		
Rp 1 ¼	Kit-GF80M	
Rp 1 ½		
Rp 2		
DN 25	Kit-GF60M	
DN 40	Kit-GF80M	
DN 50		
DN 65	Kit-GF65MF	5
DN 80	Kit-GF80MF	
DN 100	Kit-GF100MF	3
DN 125	Kit-GF125MF	2
DN 150	Kit-GF150MF	

 CE 0085 © 2009 Mertik Maxitrol, All Rights Reserved.

RVLM Series Pressure Drop Chart

NOTE: Values below apply to all pressure drop charts on pages 19-24.

1 = Air
dv = 1,00
f = 1,00

2 = Natural Gas
dv = 0,64
f = 1,24

3 = LPG
dv = 1,56
f = 0,80

$$dv = \frac{\rho_{gas}}{\rho_{air}}$$

$$f = \sqrt{\frac{\rho_{air}}{\rho_{gas}}}$$

$$\dot{V}_{gas} = f \cdot \dot{V}_{air}$$

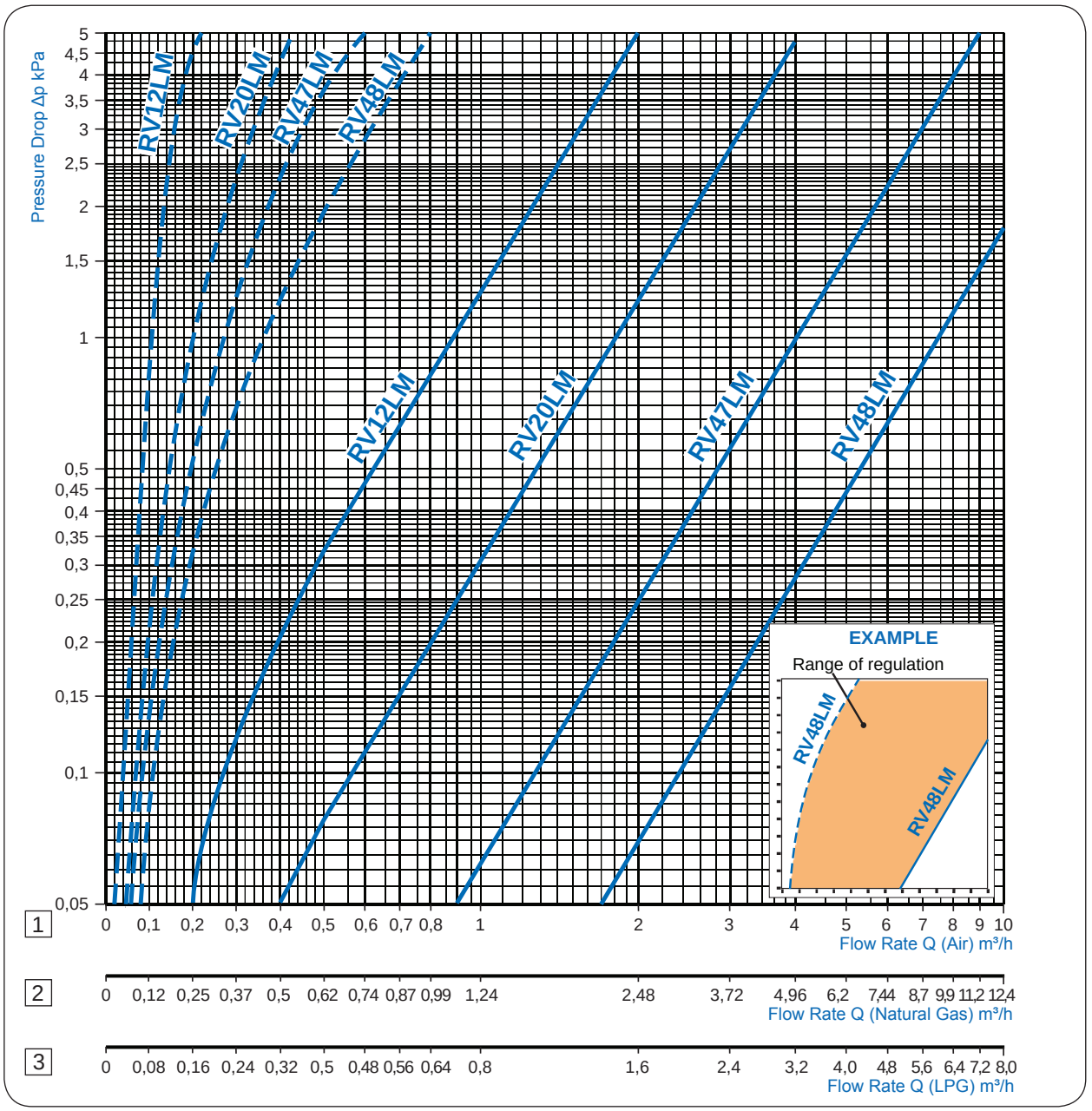

© 2009 Mertik Maxitrol, All Rights Reserved.

CE 0085

RV Series Pressure Drop Chart

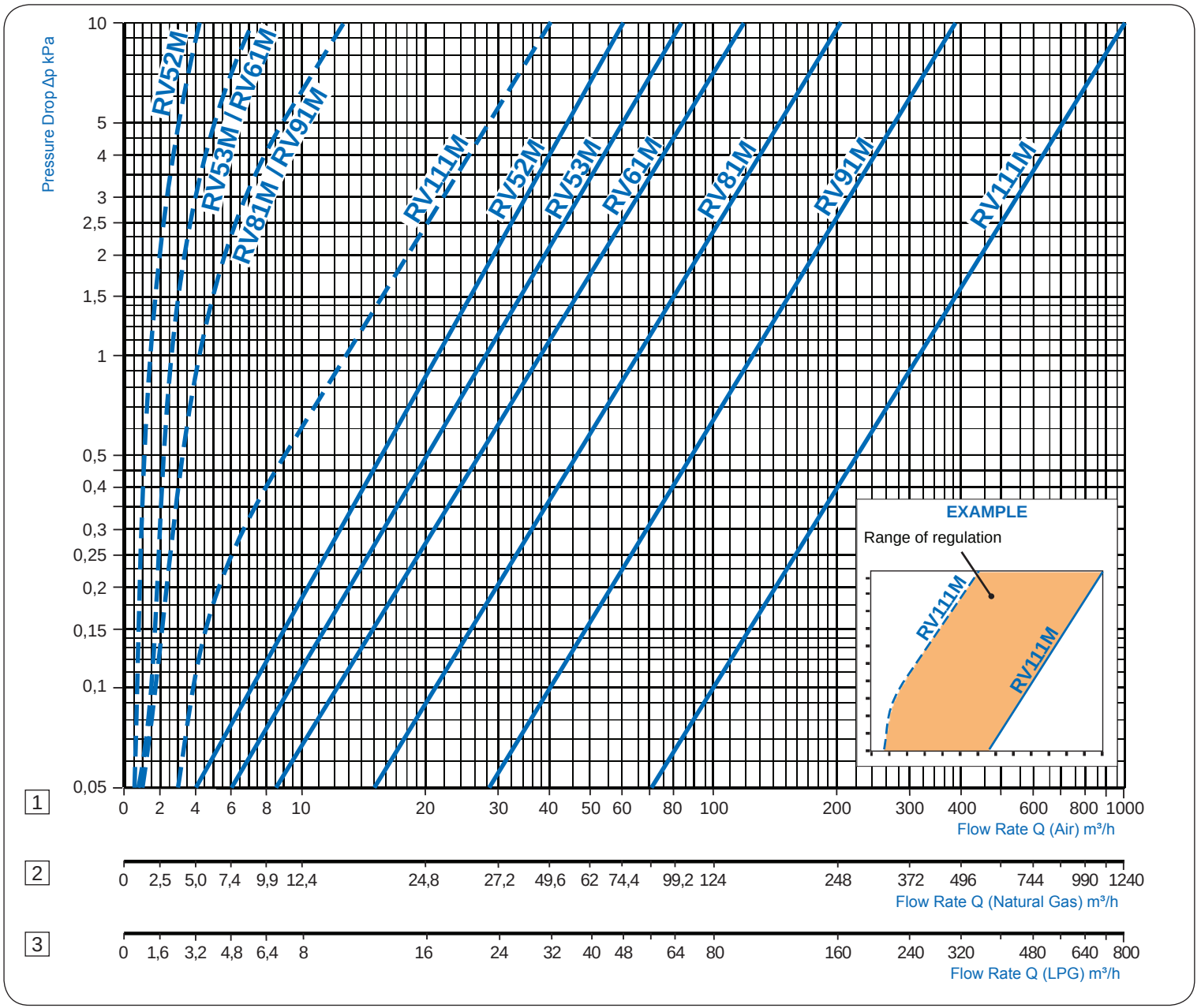

CE 0085
© 2009 Mertik Maxitrol, All Rights Reserved.

R & RS Series Pressure Drop Chart

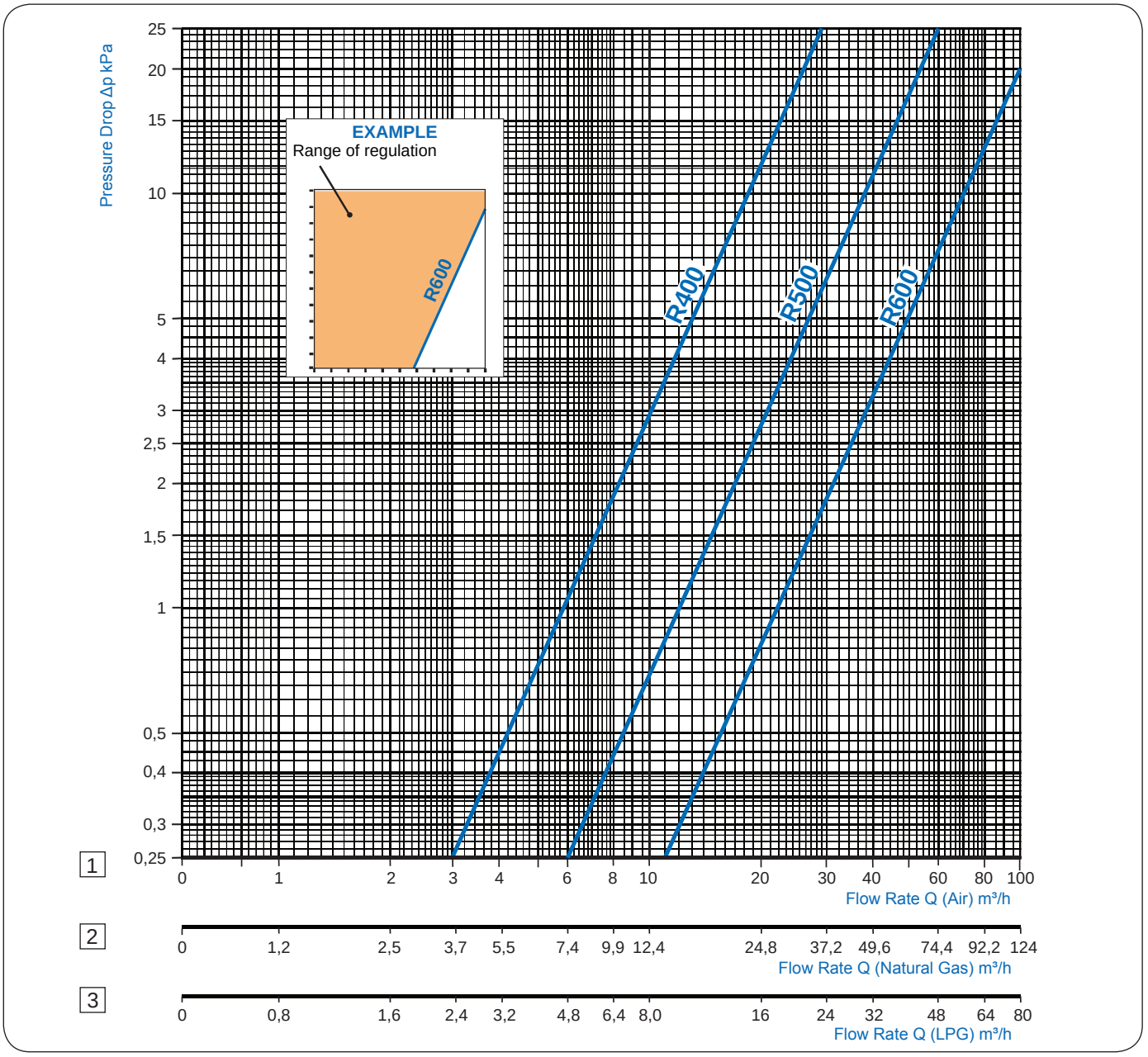

© 2009 Mertik Maxitrol, All Rights Reserved.

CE 0085

210 Series Pressure Drop Chart

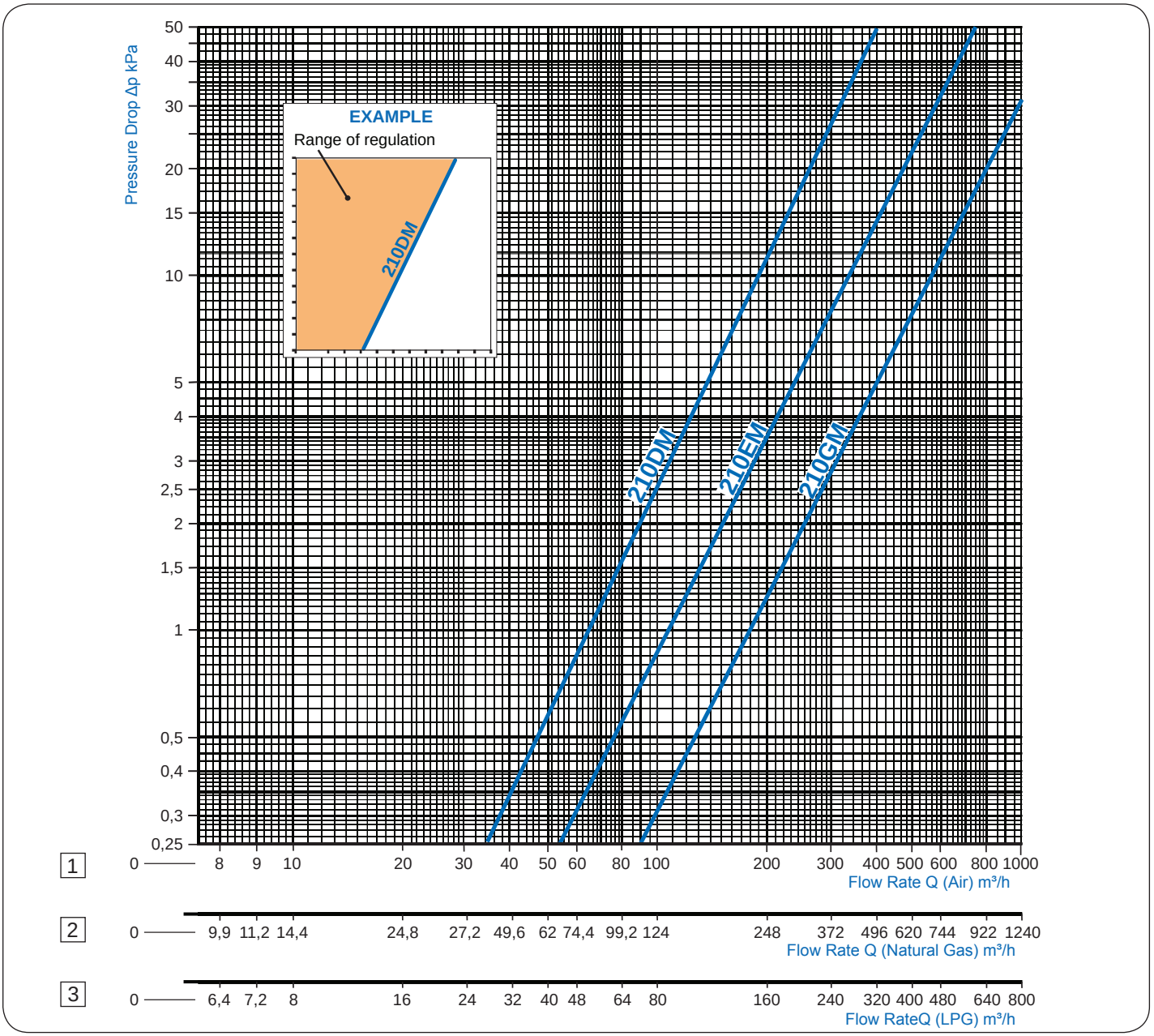

CE 0085
© 2009 Mertik Maxitrol, All Rights Reserved.

325 Series Pressure Drop Chart

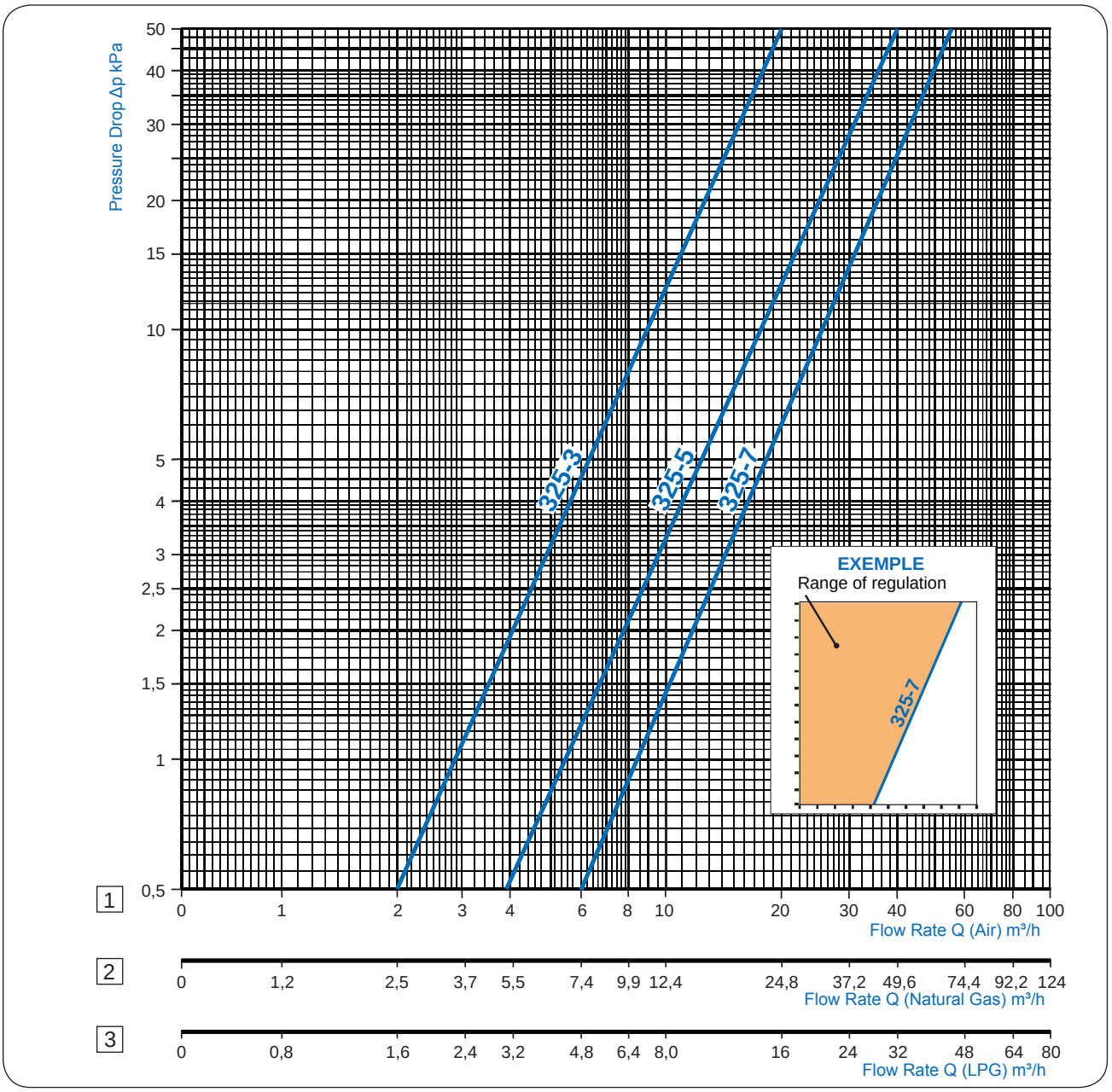

© 2009 Mertik Maxitrol, All Rights Reserved.

CE 0085

HF 2000 Series Gas & Air Filters Pressure Drop Chart

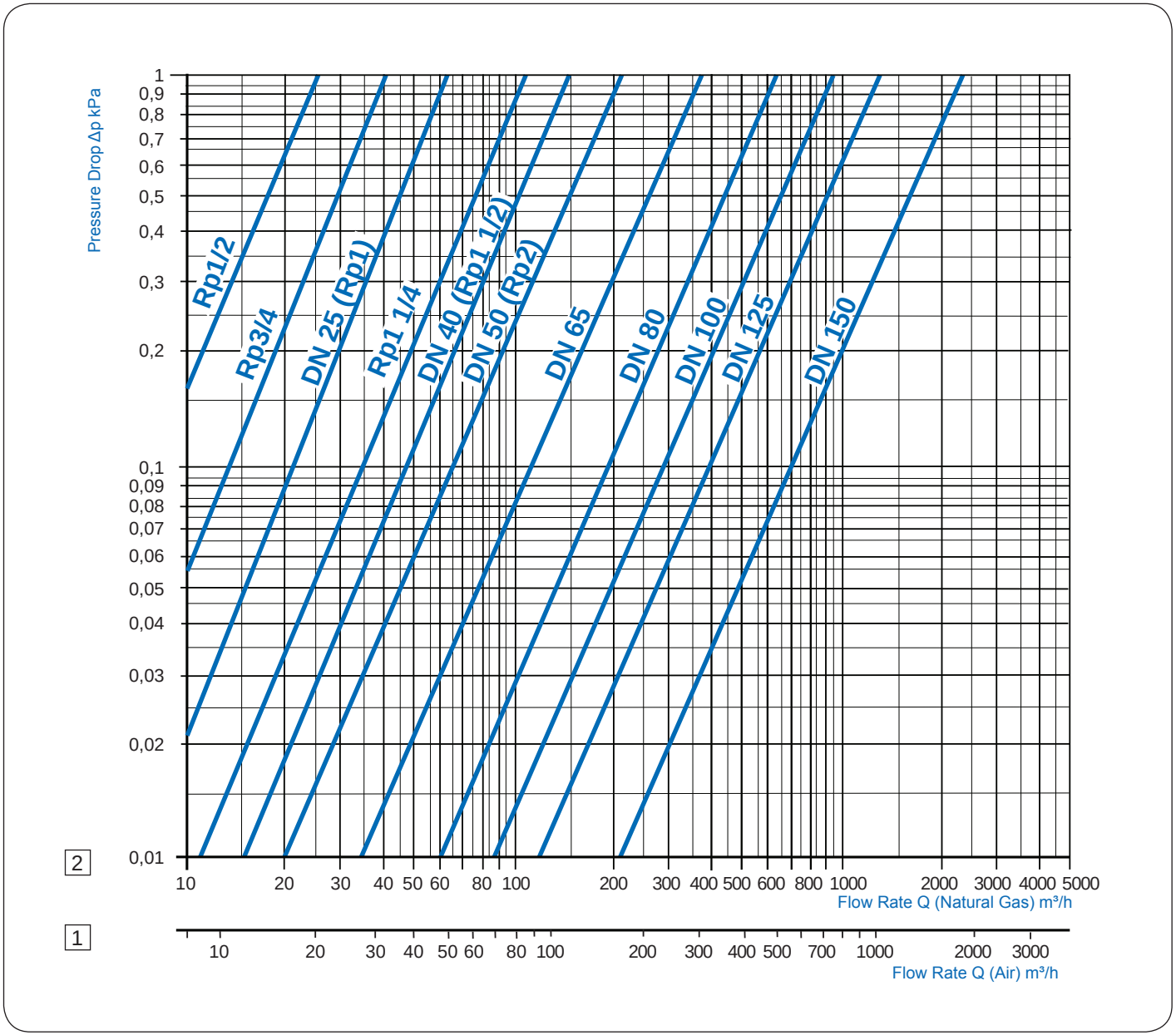

NOTE: Dimensions only apply to appliances with filter pads in new condition (clean).

CE 0085
© 2009 Mertik Maxitrol, All Rights Reserved.

Notes

© 2009 Mertik Maxitrol, All Rights Reserved.

CE 0085

Gas Pressure Regulators & Filters



MERTIK MAXITROL

Mertik Maxitrol GmbH & Co. KG
Exclusive Distributor for Maxitrol Company

Warnstedter Str. 3
06502 Thale
Germany
Tel: + 49 - 3947 - 400 - 0
Fax: + 49 - 3947 - 400 - 200
www.mertikmaxitrol.com

GDR.GF-LT-EN-10.2009

© 2009 Mertik Maxitrol, All Rights Reserved.