Vsak prenos tretjim osebam in uporaba v nedogovorjene namene ni dovoljen.
This document must not be copied without our written permission and/or transferred to a third party for any unauthorized purpose.

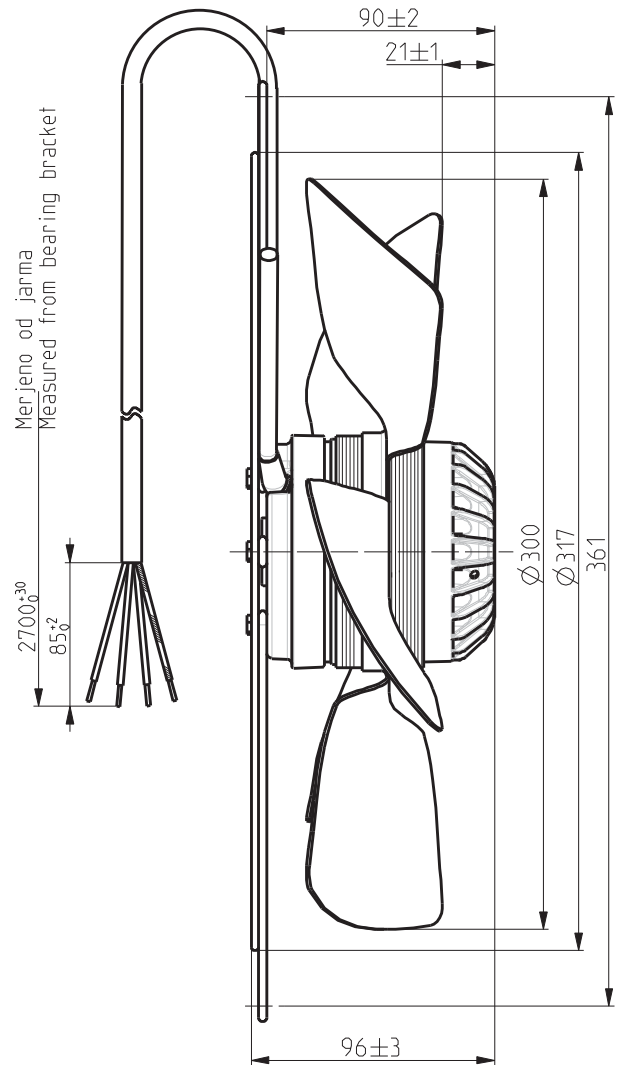

BLOWING
AIRFLOW DIRECTION
SMER ZRAKA

Capacitor delivered separately
Kondenzator se dobavlja ločeno

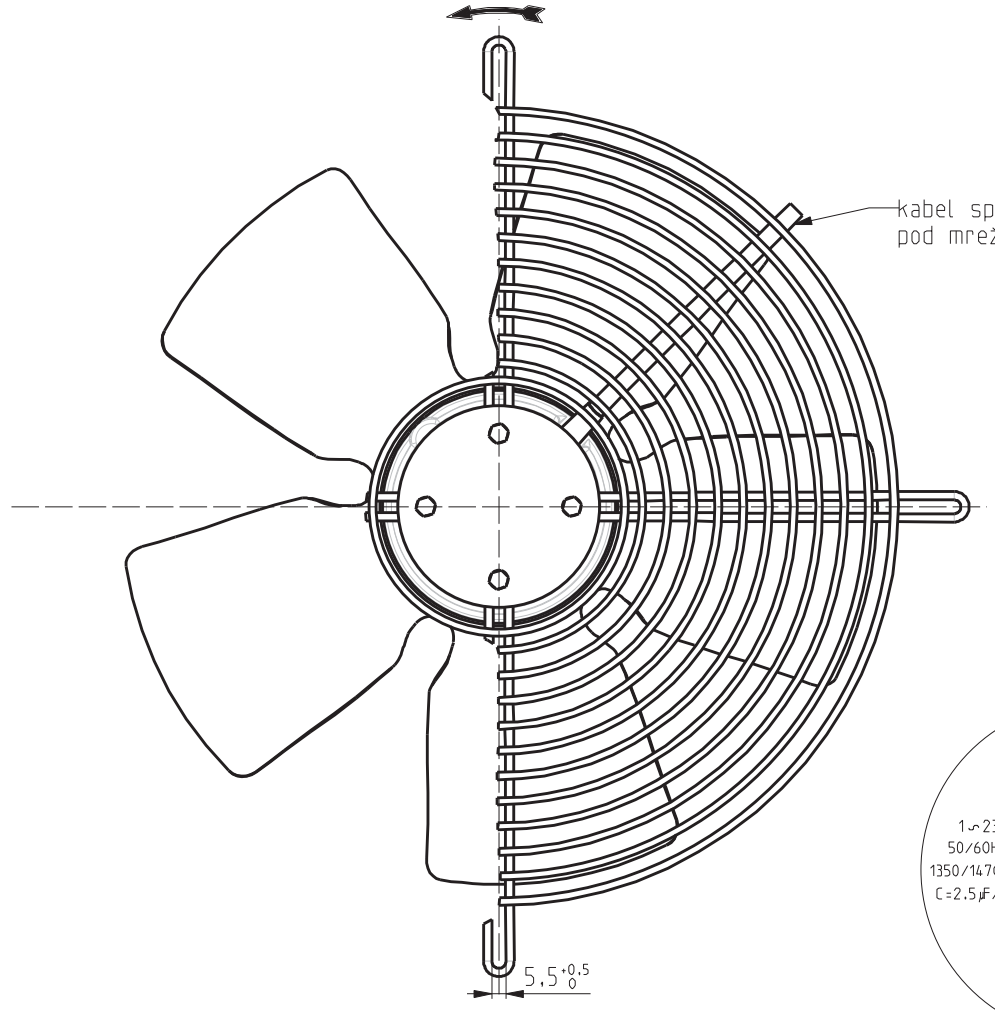

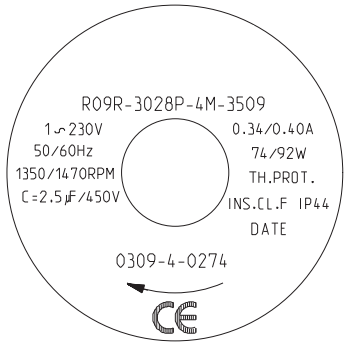

COD.6021050019 SAP.12026785

V vsako škatlo priložiti priključno shemo 0301-1-0002.
Navodilo za kontrolo ventilatorja 0301-1-4354
In each box connection diagram 0301-1-0002 has to be added
Checking instructions 0301-1-4354

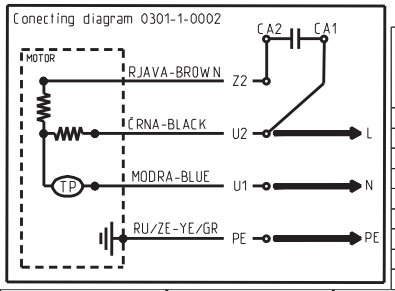

ST.	ST. SPR.	DATUM	PODPIS
2	190/07	04-Jun-2007	Uroš K.
1	104/07	27-Mar-2007	Uroš K.

NETOLERIRANE MERE / UNTOLERANCED DIM.: ISO 2768-m
POVRSINSKA OBD. / SURFACE TEXTURE:
MERILO/FORMAT: 1:2 / A3
MATERIAL:

	DATUM	PODPIS
RISAL	03-Oct-2007	Uroš K.
PROJEKTIRAL	03-Oct-2007	Matej B.
POTRDIL ROTOMATIKA MOTORS		
POTRDIL SPE LIVARSTVO		
POTRDIL SPE LAMELE		
POTRDIL ROTOMATIKA FANS		
POTRDIL		

NAZIV: TITLE:
VENTILATOR R09R-3028P-4M-3509

KODA: CODE: 0309-4-0274
0309-4-0274
VERZIJA: REV:
LIST: SHEET: 1
OD: OF: 1