Dr.coffee 咖博士
Exploring Coffee Secrets

M12
Explosive view

ISSUE：01

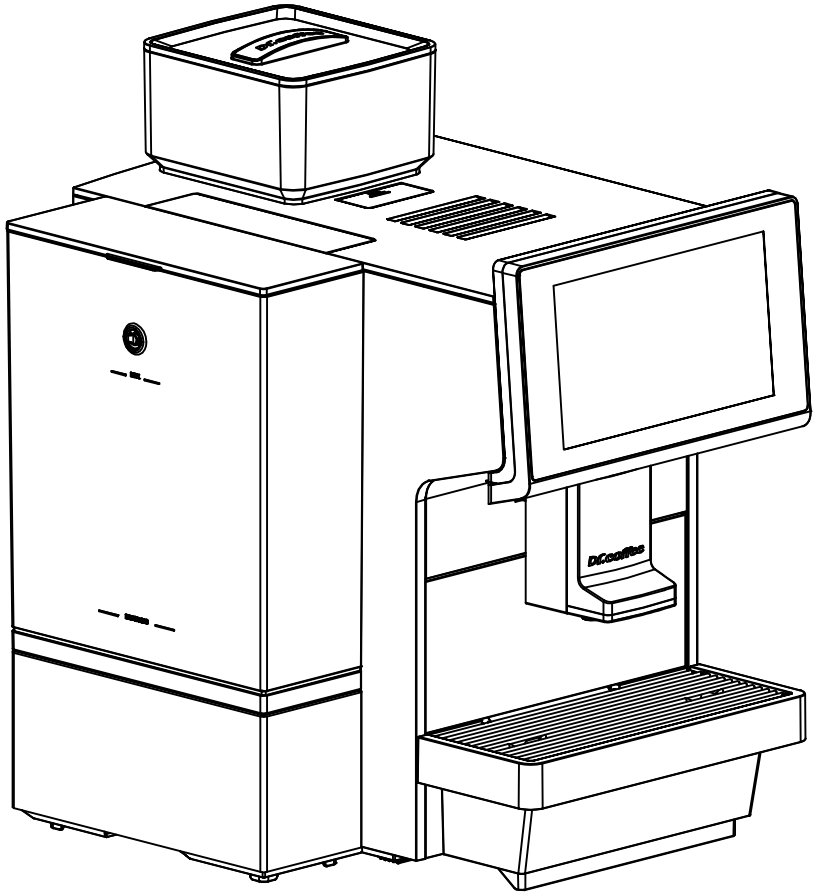

Date:2022/04/15

Content

Appearance group.....01
Body holder.....02
Water tank group.....03
Front pannel assembly.....04
Drip tray group.....05
Brew group.....06
Thermoblock assembly.....07
Pump group.....08
Ginder group.....09
Water inlet valve group.....10
Solenoid valve group.....11
Pinch valve group.....12

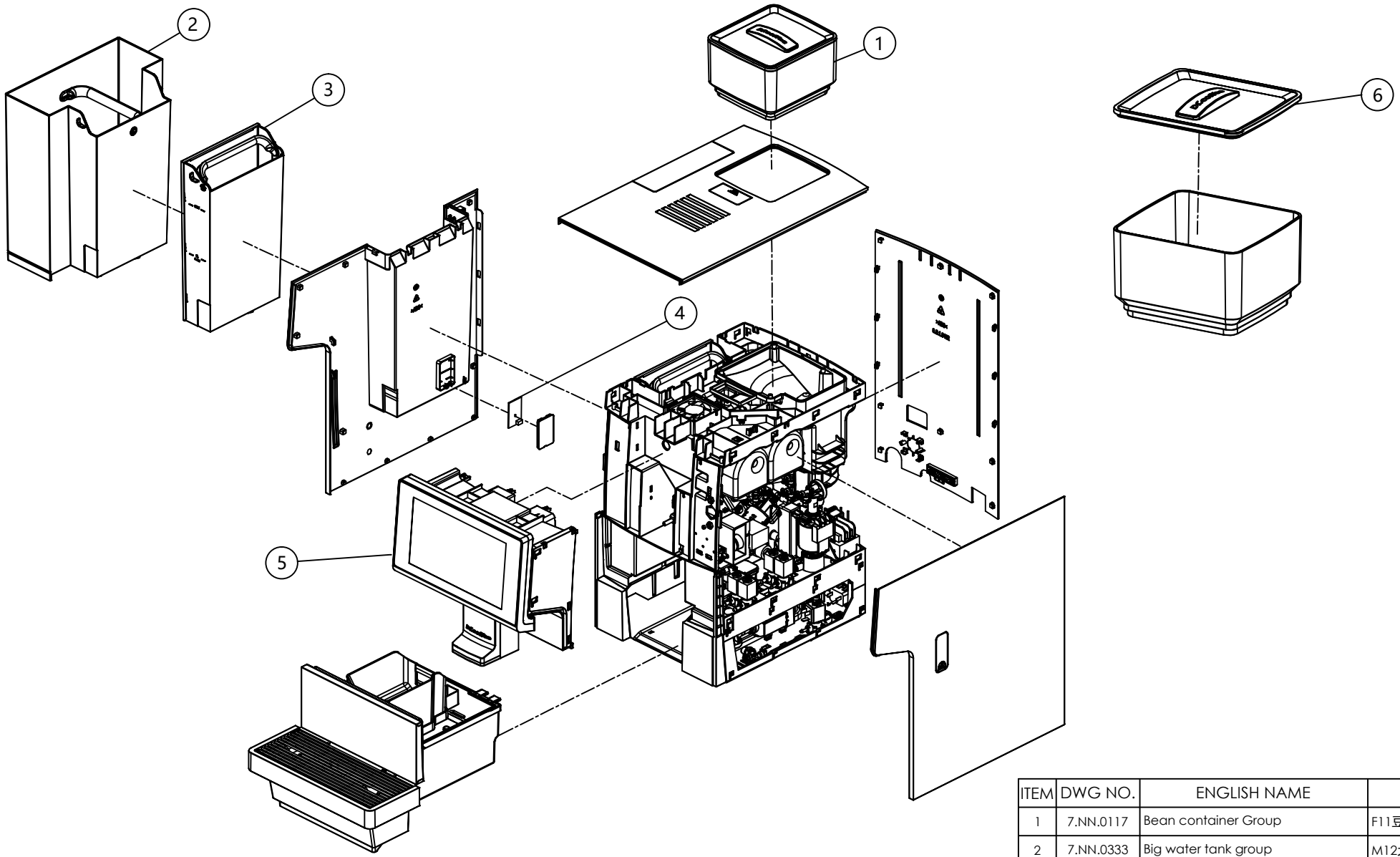

ITEM	DWG NO.	ENGLISH NAME	名称
1	7.NN.0117	Bean container Group	F11豆盒组
2	7.NN.0333	Big water tank group	M12大水箱组
3	7.NN.0277	Small water tank group	M12小水箱组
4	8.D.1.0027	Water level detection PCBA	水位检测PCB
5	7.NN.0286	Front pannel assembly	M12前面板组
6	7.NN.0121	Bean container cover	F11豆盒盖组

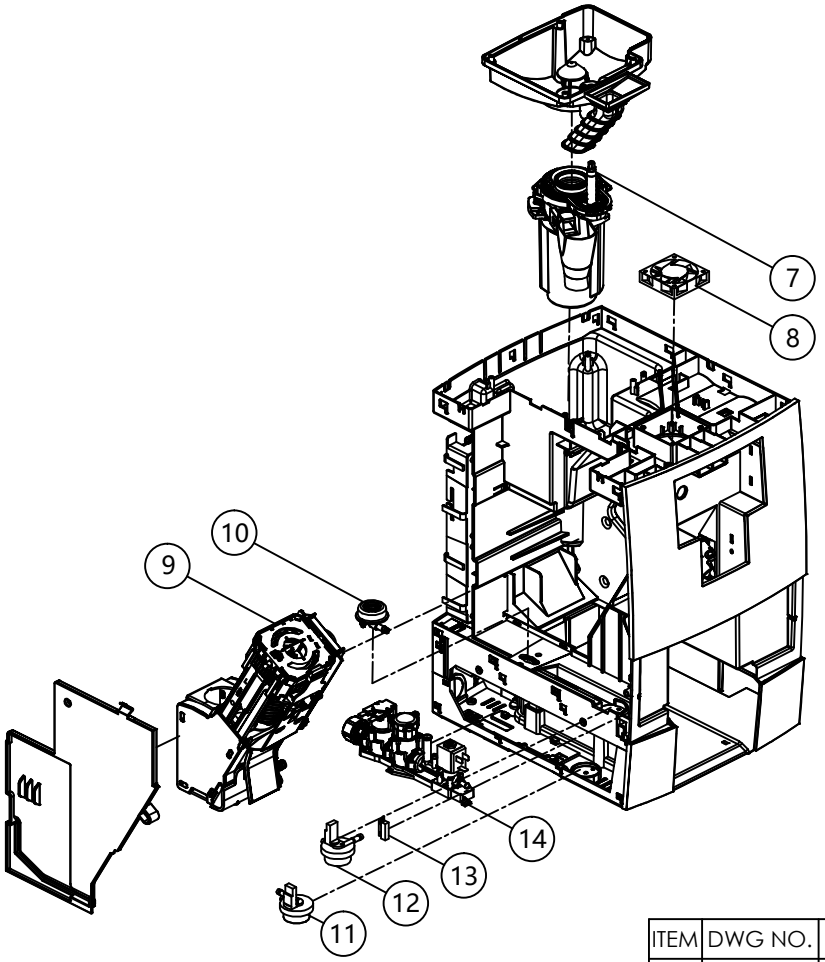

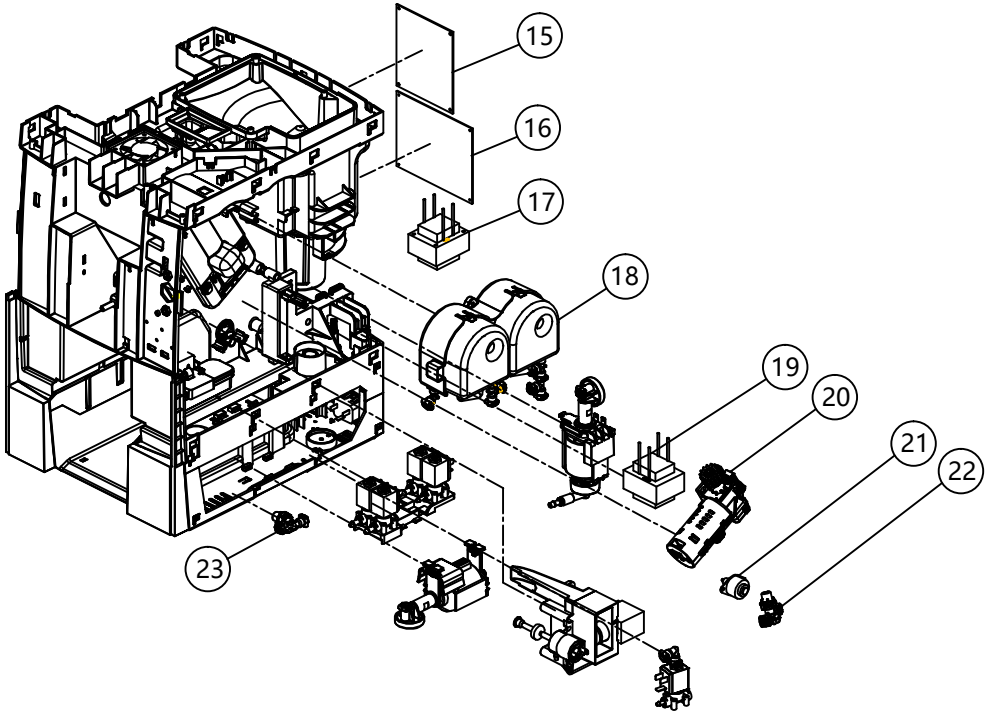

ITEM	DWG NO.	ENGLISH NAME	名称
7	7.NN.0010	Ginder group	F11磨豆组
8	8.D.3.0019	Fan	风扇
9	7.NN.0008	Brew group	F11冲泡器组
10	7.NN.0014	Water inlet valve group	F11导水座组
11	8.D.3.0065	Flowmeter 0°（1.2mm）	流量计0度（1.2mm）
12	8.D.3.0017	Flowmeter270°（1.2mm）	流量计270度（1.2mm）
13	8.D.3.0013	Reed switch	干簧管
14	7.NN.0231	Water inlet assembly	F12自动进水阀组

ITEM	DWG NO.	ENGLISH NAME	名称
15	8.D.1.0032V1	Control PCBA	M12主控板
16	8.D.1.0033	Power PCBA	M12电源板
17	8.D.3.0121	Transfomer	M12变压器
18	7.NN.0280	Thermoblock assembly	M12电热盘组
19	8.D.3.0016	Transfomer	F11变压器
20	7.NN.0115	Brew motor group	F11传动组
21	8.D.3.0014	Stepmotor	泄压步进电机
22	7.NN.0009	Dispenser valve 3W	两通蓄压阀组-3bar
23	7.NN.0206	Dispenser valve 5W	两通蓄压阀组-5bar

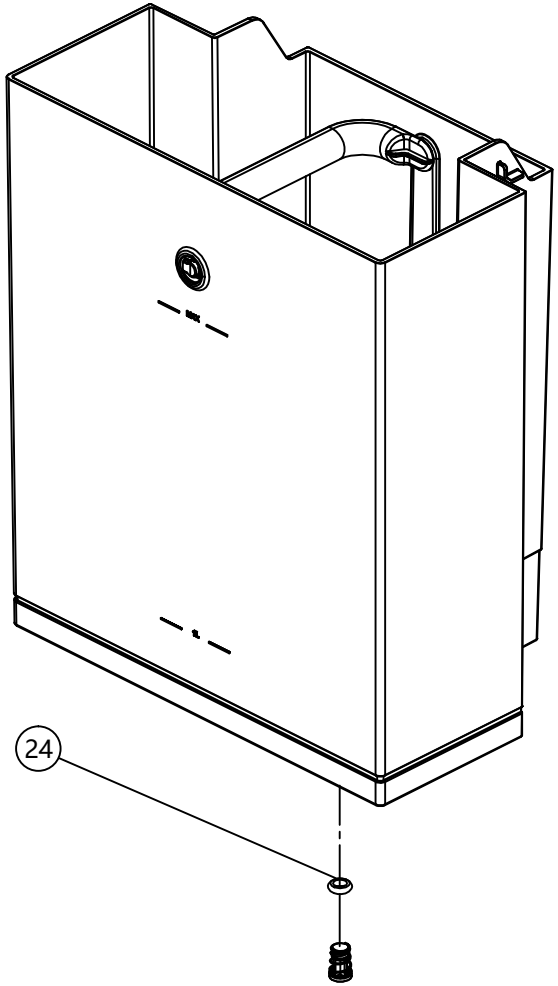

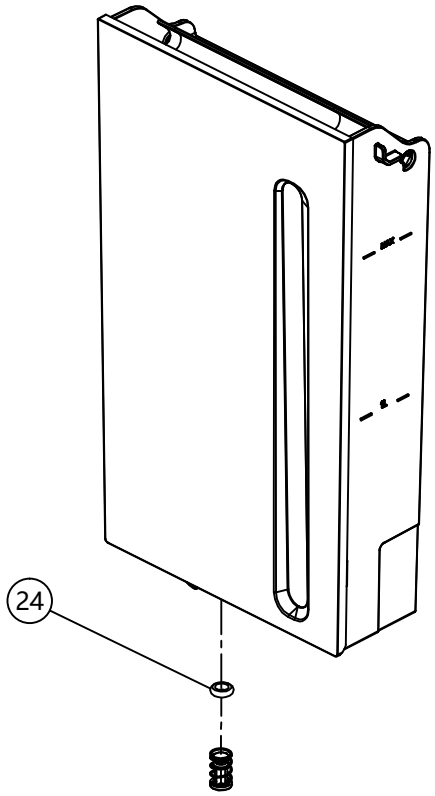

ITEM	DWG NO.	ENGLISH NAME	名称
24	8.G.1.0001	O-ring φ5.0*φ3.0	水箱止逆阀密封圈

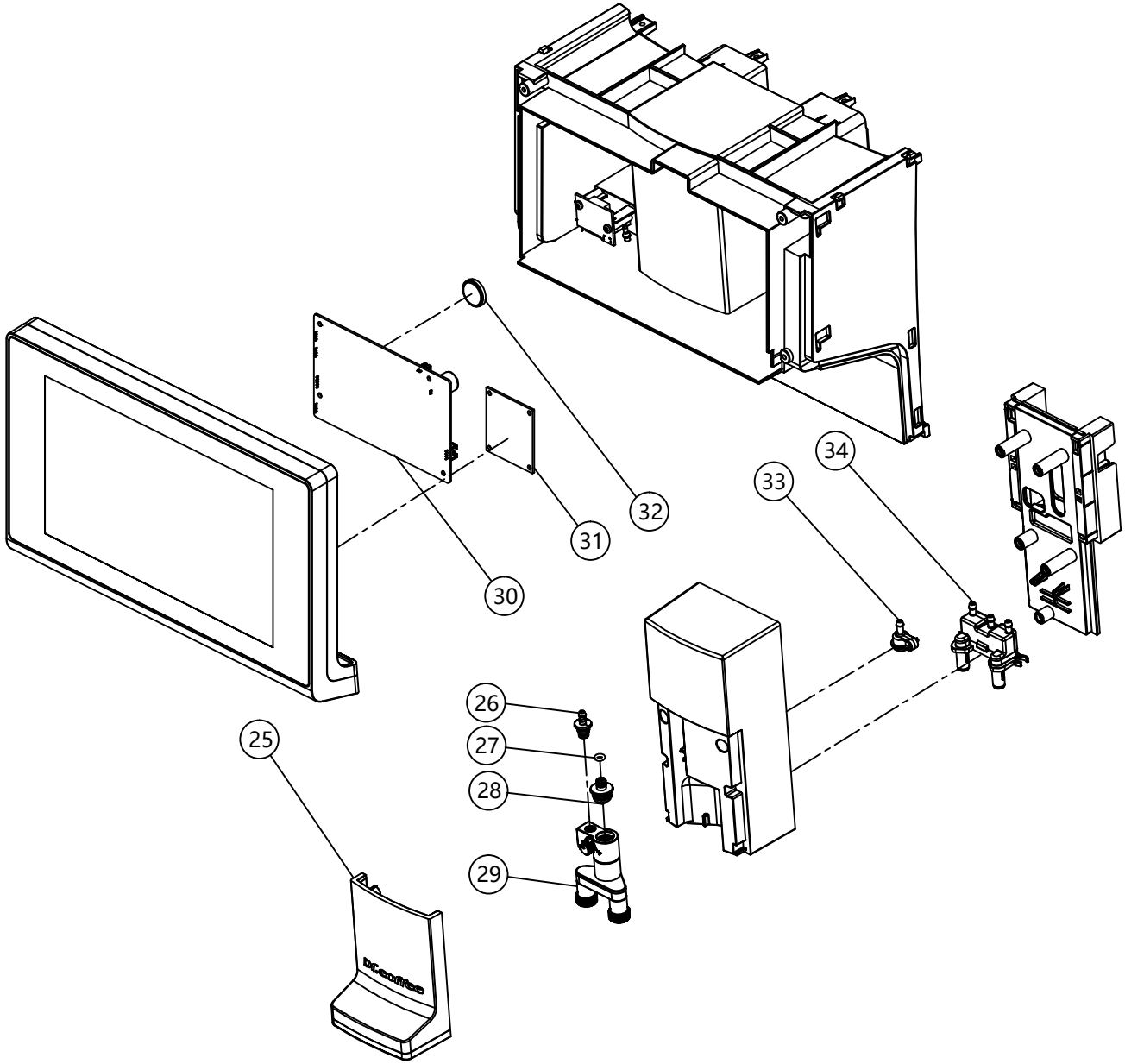

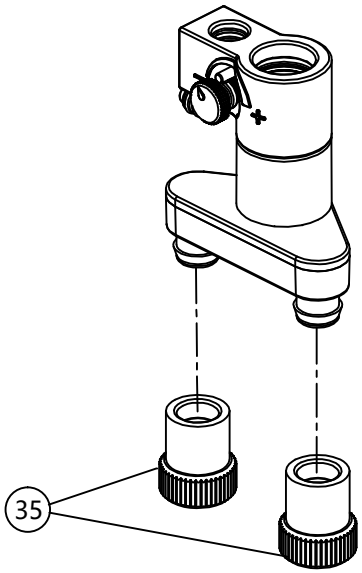

ITEM	DWG NO.	ENGLISH NAME	名称
25	8.S.1.0499	Coffee outlet cover group	M12咖啡出口盖
26	7.NN.0339	Milk pipe group	M12内部牛奶管组
27	8.G.1.0008	O-ring φ3.3*φ2.0	铜套密封圈
28	8.S.1.0491	Milk bubble nozzle	蒸汽喷嘴
29	7.NN.0288	Foamer	M12奶沫器组
30	8.D.1.0030	HMI PCBA	HMI板
31	8.D.1.0033	RGB control PCBA	M12RGB控制板
32	8.D.3.0064	Battery（CR-2032/5BC）	纽扣电池
33	8.S.1.0489	Steamer fitting	M12蒸汽转接座
34	8.S.1.0333	Coffee outlet	咖啡出口
35	8.G.2.0035	Foam applicator	奶沫器缓冲嘴

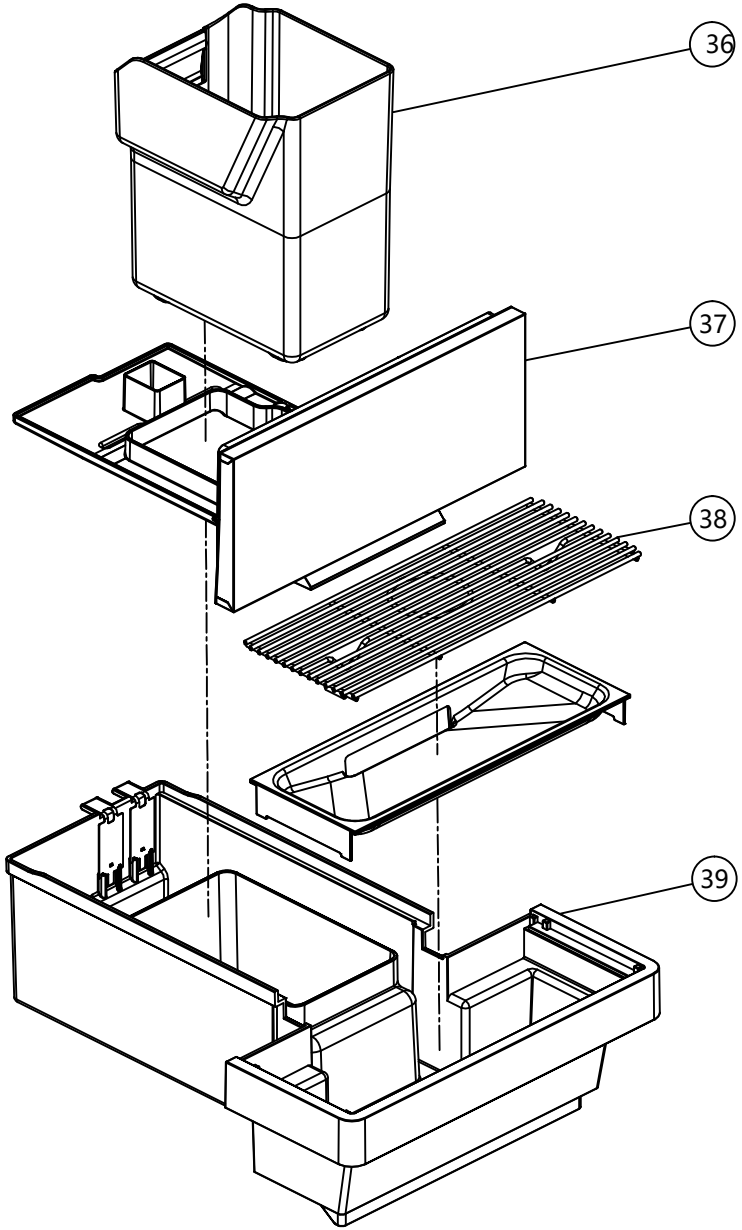

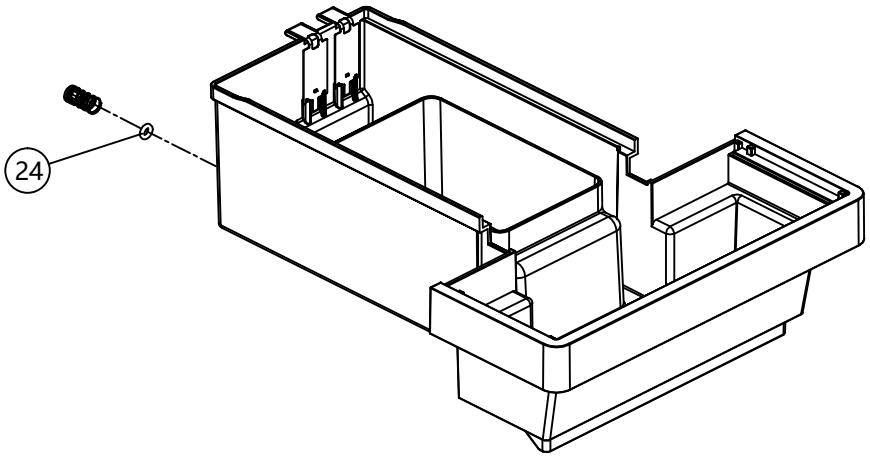

ITEM	DWG NO.	ENGLISH NAME	名称
36	7.NN.0122	Coffee grounds container	F11废渣盒
37	7.NN.0542	Coffee grounds container support	M12废渣盒支撑板
38	8.W.6.0015	Stainless steel tray	M12不锈钢托杯盘
39	7.NN.0541	Drip tray	M12蓄水盘
24	8.G.1.0001	O-ring φ5.0*φ3.0	水箱止逆阀密封圈

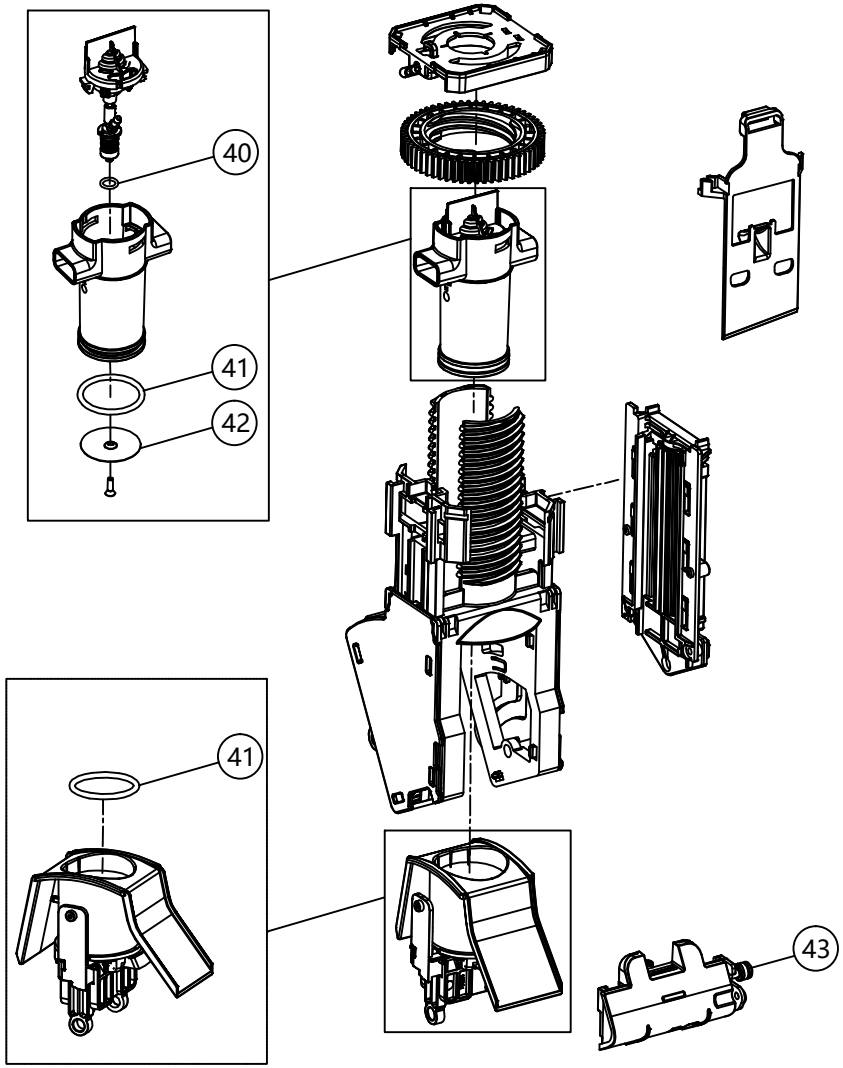

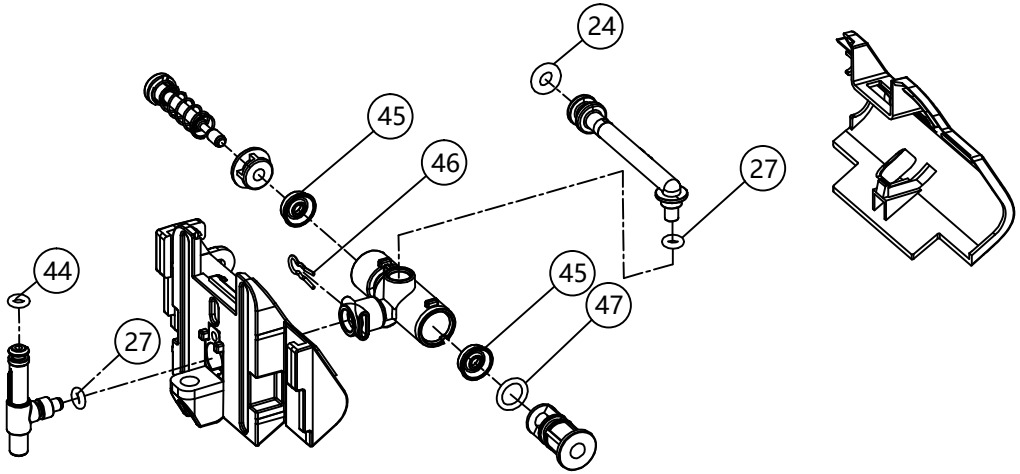

ITEM	DWG NO.	ENGLISH NAME	名称
40	8.G.1.0005	O-ring φ8.5*φ1.8	蓄压阀密封圈
41	8.G.1.0004	O-ring φ37.69*φ3.53	冲煮头密封圈
42	8.W.6.0011	Coffee Filter	冲煮头过滤网
43	7.NN.0237	Brewer presser reliving valve	F11冲泡器泄压阀组
44	8.G.1.0009	O-ring φ4*φ1.6	出水管密封圈
27	8.G.1.0008	O-ring φ3.3*φ2.0	铜套密封圈
45	8.G.2.0007	Y-ring φ12.20*φ3.65	泄压阀Y型密封圈
46	8.W.5.0023	Spring clip	通用弹簧夹
47	8.G.1.0007	O-ring φ8*φ1.8	泄水管密封圈
24	8.G.1.0001	O-ring φ5.0*φ3.0	水箱止逆阀密封圈

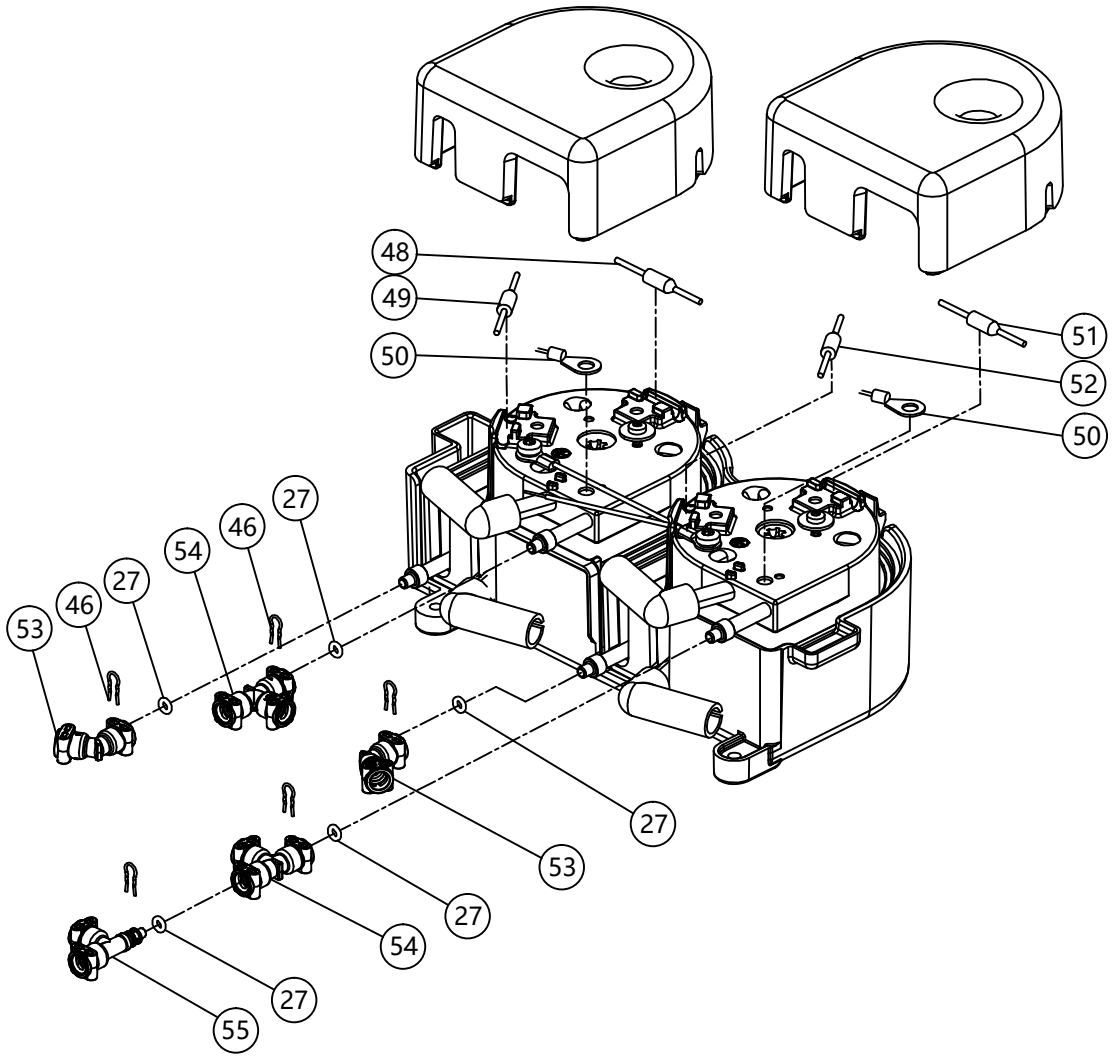

ITEM	DWG NO.	ENGLISH NAME	名称
48	8.D.2.0009	Coffee fused-cord-L	咖啡电热盘火线
49	8.D.2.0211	Steam fused-cord-L	M12咖啡电热盘零线
50	8.D.3.0004	Temperature Sensor	电热盘NTC
51	8.D.2.0011	Steam fused-cord-L	蒸汽电热盘火线
52	8.D.2.0010	Coffee fused-cord-N	咖啡电热盘零线
53	8.S.1.0428	Fitting	120度两通接头
46	8.W.5.0023	Spring clip	通用弹簧夹
27	8.G.1.0008	O-ring φ3.3*φ2.0	铜套密封圈
54	8.S.1.0517	Fitting	三通铁氟龙接头
55	8.S.1.0144	Fitting	三通转接头

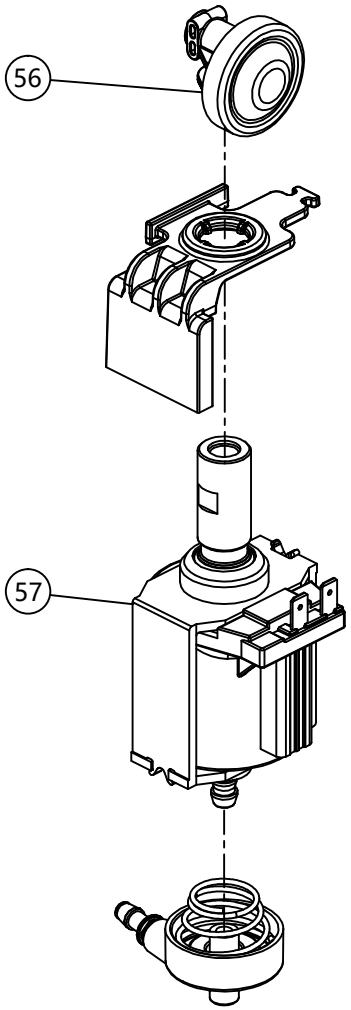

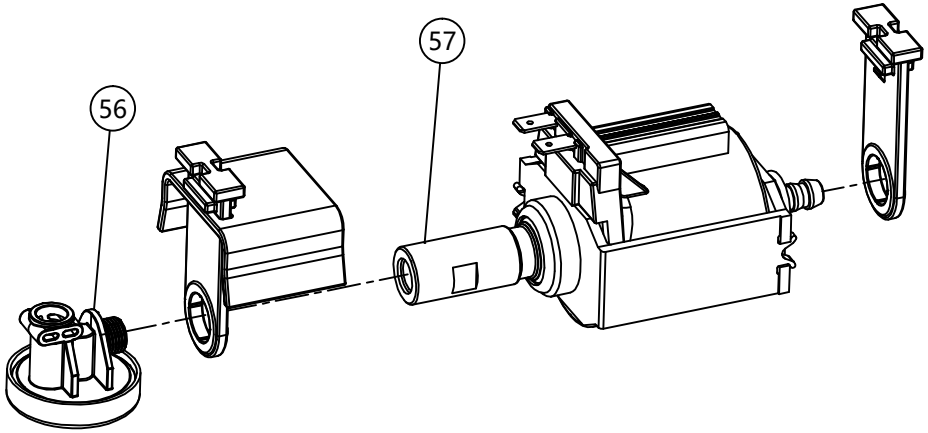

ITEM	DWG NO.	ENGLISH NAME	名称
56	7.NN.0012	Membrane controller group	稳压阀组
57	8.D.3.0051	Pump（220-240V 50Hz）	水泵（220-240V 50Hz）
	8.D.3.0052	Pump（220-240V 60Hz）	水泵（220-240V 60Hz）

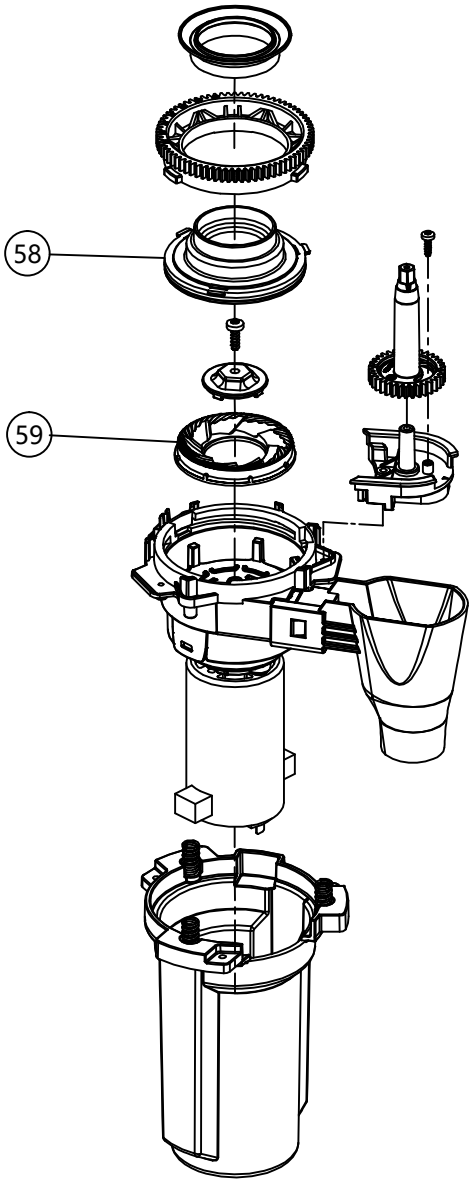

ITEM	DWG NO.	ENGLISH NAME	名称
58	7.NN.0119	Upper grinder burr assembly	上刀盘组
59	8.T.1.0003	Grinder burr	磨豆刀

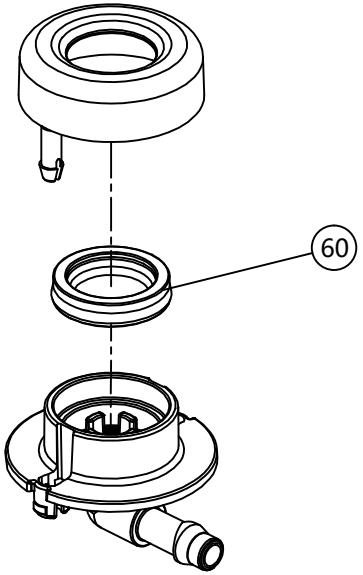

ITEM	DWG NO.	ENGLISH NAME	名称
60	8.G.2.0014	Y-ring φ22.67*φ13.90	导水座Y型密封圈

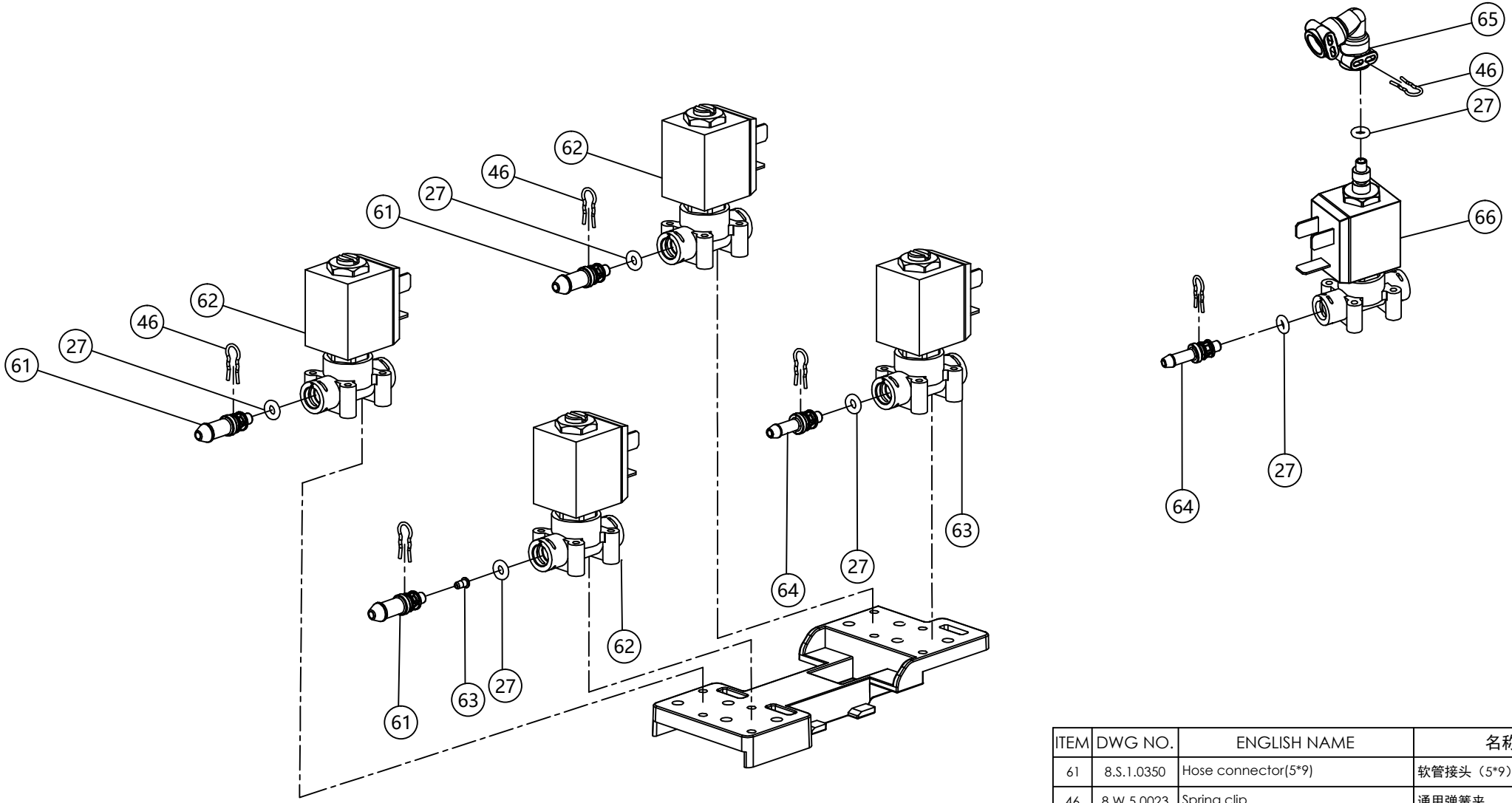

ITEM	DWG NO.	ENGLISH NAME	名称
61	8.S.1.0350	Hose connector(5*9)	软管接头（5*9）
46	8.W.5.0023	Spring clip	通用弹簧夹
27	8.G.1.0008	O-ring φ3.3*φ2.0	铜套密封圈
62	8.D.3.0021	Solenoid valve 2W	两通电磁阀
63	8.W.4.0059	Orifice	M12限流孔
64	8.S.1.0342	Hose connector(3*6)	软管接头（3*6）
65	8.S.1.0136	Fitting	分向阀转接头
66	8.D.3.0120	Solenoid valve 3W	三通电磁阀-3口为卡口

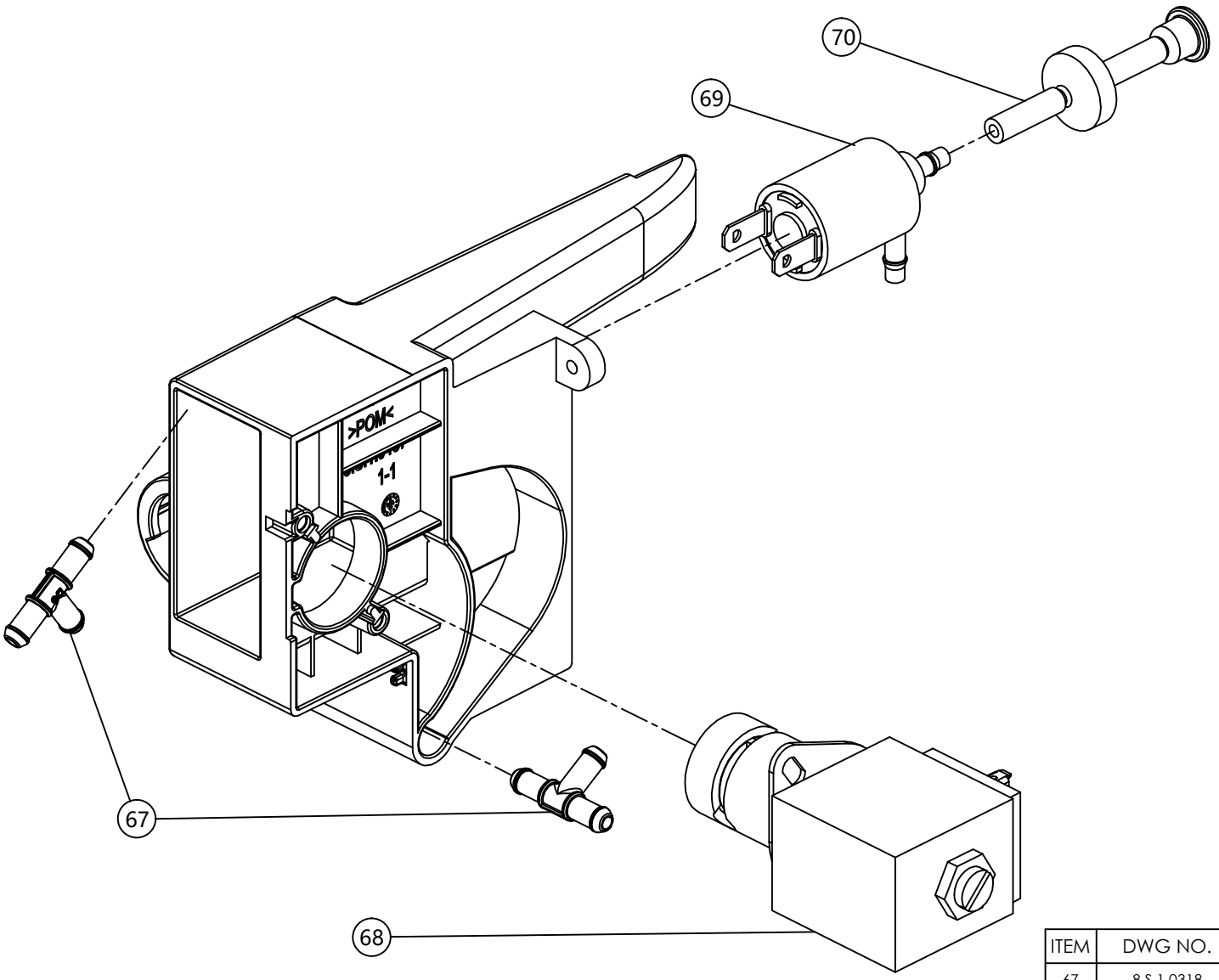

ITEM	DWG NO.	ENGLISH NAME	名称
67	8.S.1.0318	3 Way hose conector	三通软管接头6mm
68	8.D.3.0085	Pinch valve	夹管阀
69	8.D.3.0036	Soleniod valve	气阀
70	7.NN.0202	Air inlet valve assembly	鸭嘴阀组